http://www.parsun.com.cn

2010

PARSUN

百胜

零件目录

PARTS CATALOGUE

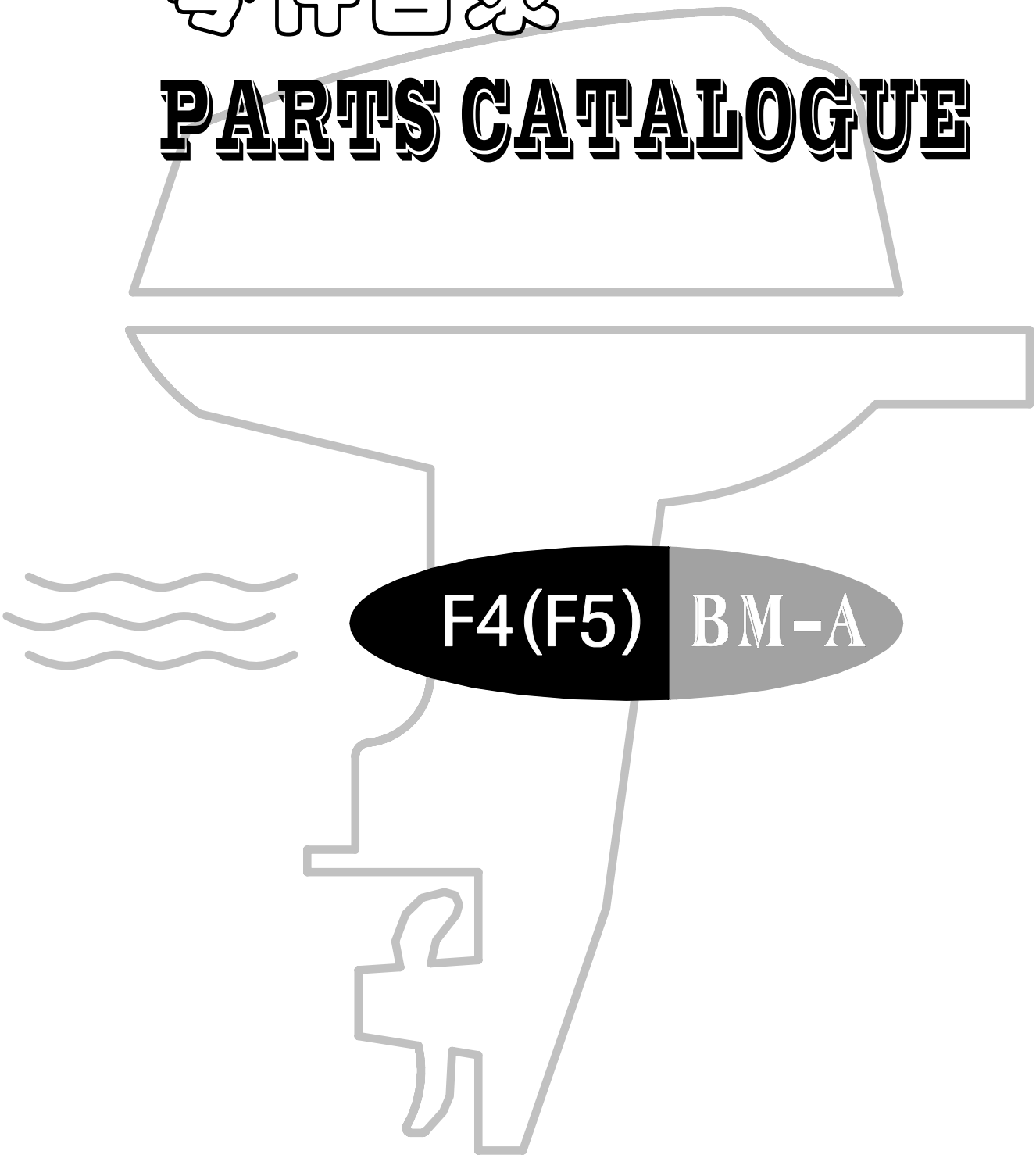

F4(F5) BM-A

苏州百胜动力机器有限公司

SUZHOU PARSUN POWER MACHINE CO.,LTD

目录
CONTENTS

控制系统 — — —

零部件名称:	控制系统
PARTS NAME:	CONTROL

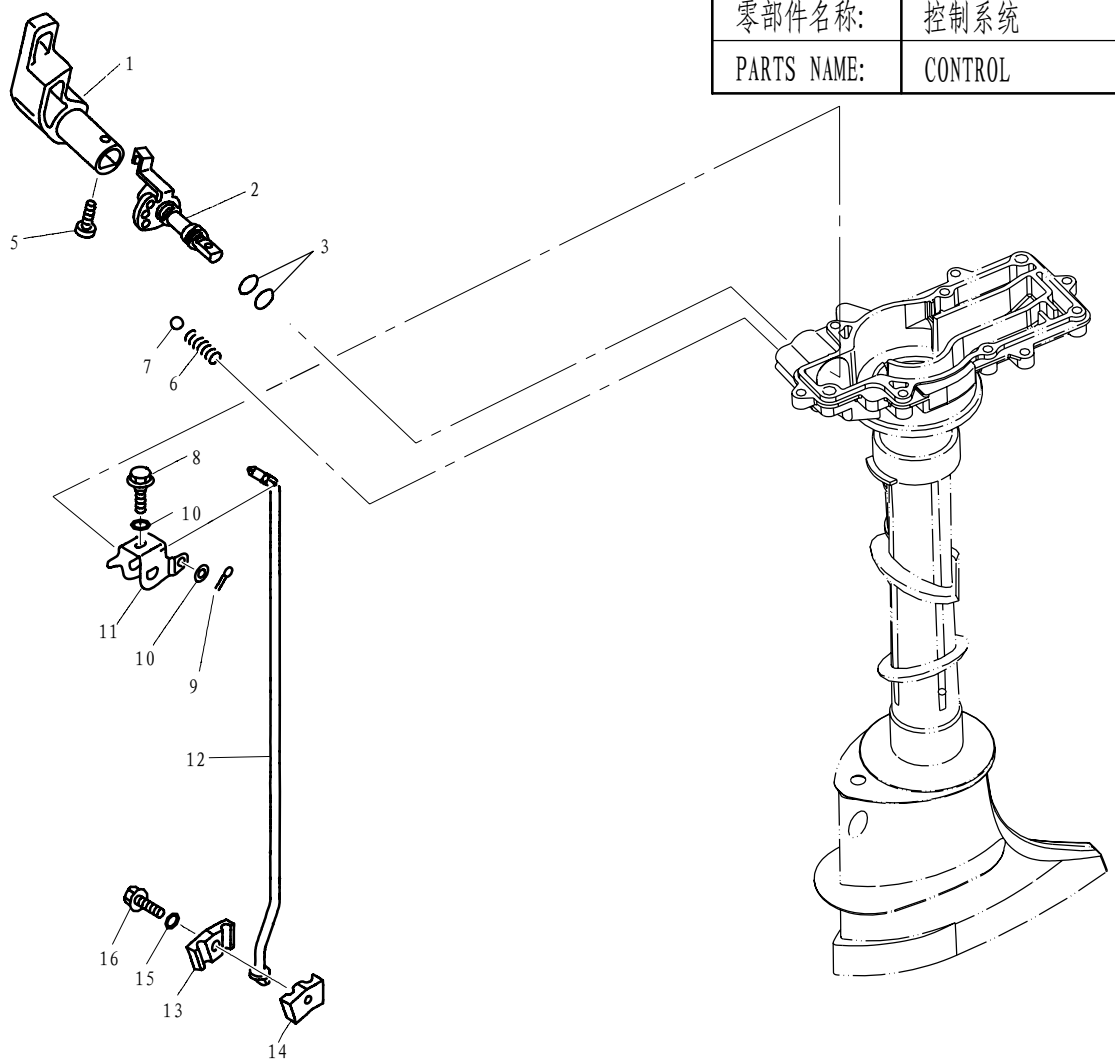

SN. 参照号码	PART NO. 零件编号	DESCRIPTION 零件名称(中文)	DESCRIPTION 零件名称(英文)	QTY 数量					REMARKS 备注
1	F4-00000007	变档手柄	HANDLE, GEAR SHIFT	1					
2	F4-02010000	变档拨叉组件	SHAFT, CHANGE	1					
3	JISB2401-P9	"O"形密封圈P9	O-RING P9	2					
4									
5	GB/T820-M5x20	十字半沉头螺钉M5x20	SCREW, OVAL HEAD M5×20	1					
6	F4-02000003	变档弹簧	SPRING, GEAR	1					
7	GB/T308-8	钢珠8	BALL 8	1					
8	GB/T5783-M5x25	六角螺栓M5x25	BOLT M5×25	1					
9	GB/T91-1.6x12	开口销1.6x12	PIN, COTTER 1.6×12	1					
10	GB/T97.1-5	平垫圈5	WASHER 5	2					
11	F4-02000006	变档连杆支架	LEVER, SHIFT ROD	1					
12	F4-02000004	变档连杆	ROD, SHIFT	1					
13	F4-00000003	变档连杆连接器A	CONNECTOR, SHIFT ROD A	1					
14	F4-00000004	变档连杆连接器B	CONNECTOR, SHIFT ROD B	1					
15	F4-00000005	大垫圈	BIG, WASHER	1					
16	GB/T5783-M6x20	六角螺栓M6x20	BOLT M6×20	1					

零部件名称:	托架
PARTS NAME:	BRACKET

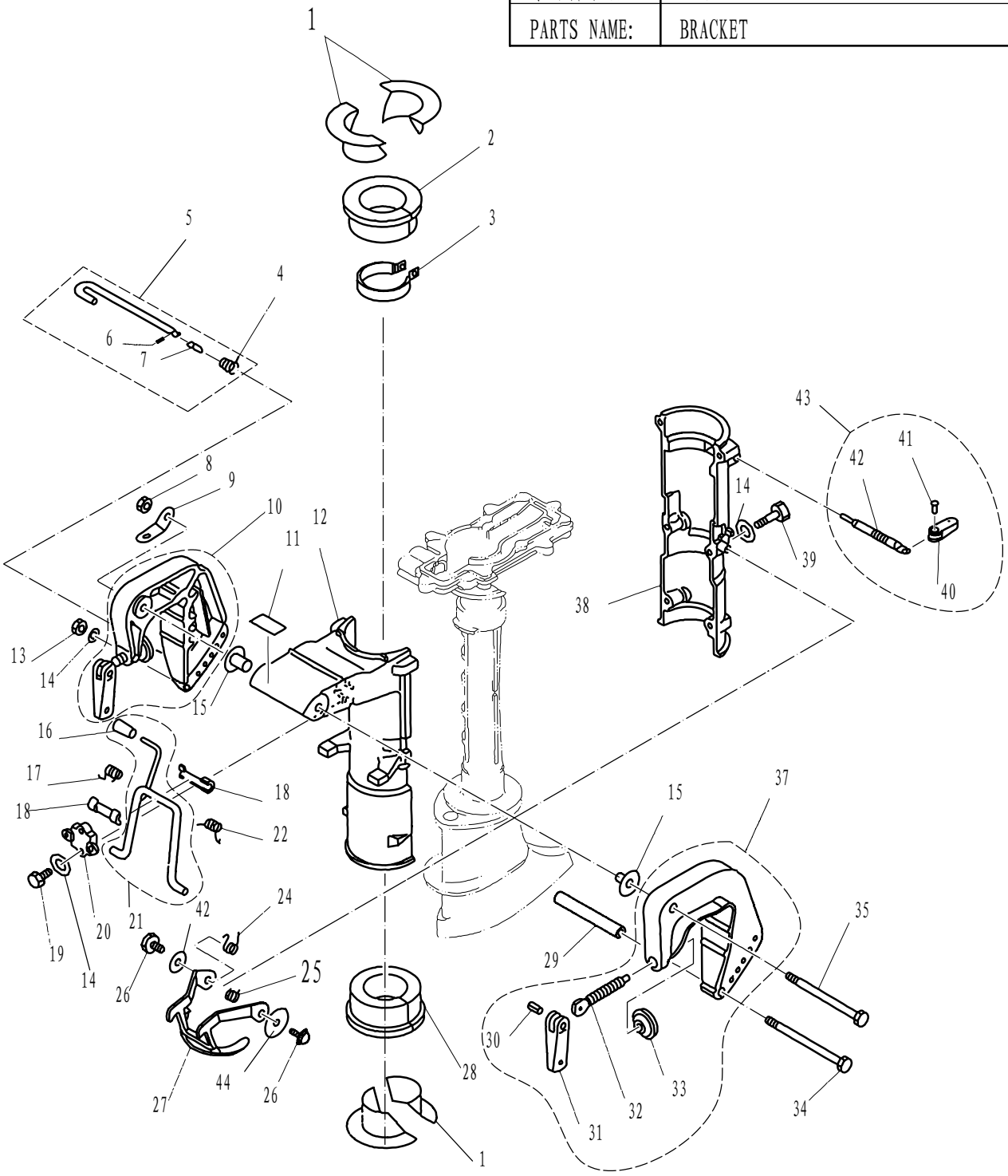

SN. 参照号码	PART NO. 零件编号	DESCRIPTION 零件名称(中文)	DESCRIPTION 零件名称(英文)	QTY 数量					REMARKS 备注
1	F4-02000008	减震圈衬管	BUSH ,SHOCK ABSORPTION	4					
2	F4-02000007	上减震圈	TOP ,SHOCK ABSORPTION	1					
3	F4-02020000	水上装置锁紧圈组件	UPPER LOCKING RING ASSY	1					
4	F4-01050002	锥形弹簧	SPRING ,CONICAL	1					
5	F4-01050000	角度调整杆组件	TILT ROD ASSY	1					

零部件名称: 托架

PARTS NAME: BRACKET

SN. 参照号码	PART NO. 零件编号	DESCRIPTION 零件名称(中文)	DESCRIPTION 零件名称(英文)	QTY 数量					REMARKS 备注
6	GB/T879-3x8	弹性圆柱销φ3×8	PIN ,SPRING φ3×8	1					
7	F4-01050003	防脱落支脚	NOG ,PREVENTED UNLOCK	1					
8	GB/T889.1-M8	非金属嵌件六角锁紧螺母M8	NUT M8	1					
9	F4-01000002	双孔固定板	PLATE	2					
10	F4-01020000	夹紧托架（左）组件	BRACKET LEFT ASSY	1					
11	F4-08000018	标贴18	MARK 18	1					
12	F4-01030001	旋转支架座	BRACKET ,SWIVEL	1					
13	GB/T6170-M6	六角螺母M6	NUT M6	1					
14	GB/T97.1-6	平垫圈6	WASHER 6	11					
15	F4-01000003	尼龙垫圈	WASHER ,NYLON	2					
16	F4-01030103	手柄套	SHEATH HANDLE	1					
17	F4-01030003	支撑架扭簧（左）	SPRING ,TORSION (LEFT)	1					
18	F4-01030002	支撑架尼龙衬套	BUSHING ,NYLON	2					
19	GB/T5783-M6x20	六角头螺栓M6×20	BOLT M6×20	2					
20	F4-01030005	支撑架固定盖	FIXED COVER ,BRACKET	1					
21	F4-01030100	角度定位支撑架组件	BRACKET ASSY ,TILT LOCK	1					
22	F4-01030004	支撑架扭簧（右）	SPRING ,TORSION (RIGHT)	1					
23									
24	F4-01000006	锁紧钩扭簧（左）	SPRING	1					
25	F4-01000007	锁紧钩扭簧（右）	SPRING	1					
26	GB/T5783-M6X12	六角头螺栓M6×12	BOLT M6×12	2					
27	F4-01070000	起翘锁紧钩组件	TILT LOCKED CLASP ASSY	1					
28	F4-02000009	下减震圈	BOTTOM ABSORBTION ASSY	1					
29	F4-01000004	螺栓垫管	BUSHER ,BOLT	1					
30	F4-01010005	艉板夹紧手柄铆钉	RIVET ,CLAMP HANDLE	2					
31	F4-01010004	艉板夹紧手柄	CLAMP SHIPBOARD HANDLE	2					
32	F4-01010002	艉板夹紧螺杆	CLAMP BOLT	2					
33	F4-01010003	艉板夹紧圆盘	CLAMP PLATE	2					
34	GB/T5782-M6x125	六角螺栓M6×125	BOLT M6×125	1					
35	GB/T5782-M8x135	六角螺栓M8×135	BOLT M8×135	1					
36									
37	F4-01010000	夹紧托架（右）组件	BRACKET RIGHT ASSY	1					
38	F4-01000005	旋转支架座盖	COVER ,SWIVEL BRACKET	1					
39	GB/T5782-M6x35	六角头螺栓M6×35	BOLT M6×35	6					
40	F4-01060002	锁紧手柄	CLAMP HANDLE	1					
41	GB/T875-4x11	扁平头半空心铆钉φ4×11	RIVET φ4x11	1					
42	F4-01060001	锁紧螺杆	LOCKED SCREW	1					
43	F4-01060000	锁紧手柄组件	LOCKED HANDLE ASSY	1					
44	GB/T96-6	大垫圈 6	BIG WASHER 6	2					

零部件名称:	操舵系统
PARTS NAME:	STEERING

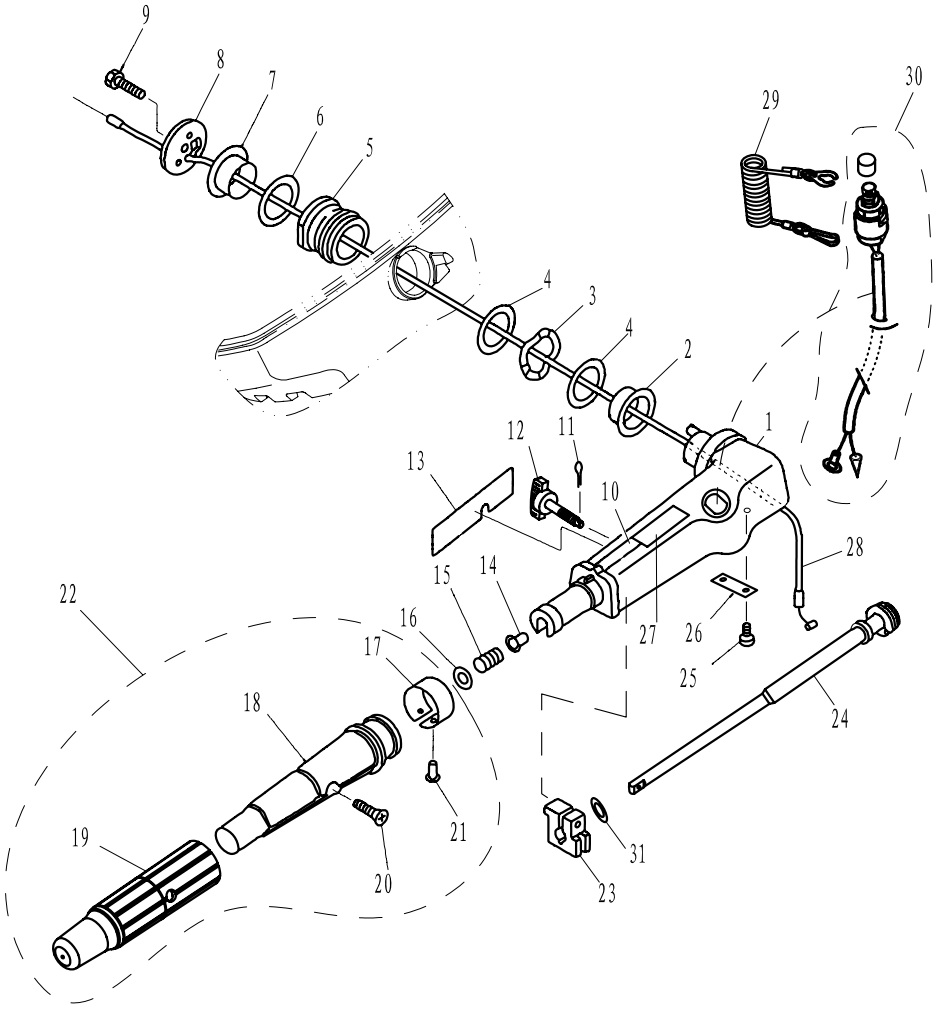

SN. 参照号码	PART NO. 零件编号	DESCRIPTION 零件名称(中文)	DESCRIPTION 零件名称(英文)	QTY 数量					REMARKS 备注
1	F4-01090001	操舵手柄	HANDLE, STEERING	1					
2	F4-01000009	操舵手柄衬套A	BUSGING, HANDTE A	1					
3	F4-01000012	手柄衬套波形垫圈	BUSH	1					
4	F4-01000010	衬套垫圈B	WASHER, BUSHING B	2					
5	F4-05000014	操舵手柄减震器	BUSHING, RABBER	1					
6	F4-01000011	衬套垫圈A	WASHER BUSHING A	1					
7	F4-01000008	操舵手柄衬套B	BUSHING	1					
8	F4-01000014	操舵手柄盖板	COVER, HANDLE STEERING	1					
9	GB/T5783-M8x25	六角头螺栓M8x25	BOLT M8×25	1					
10	F4-08000014	标贴14	MARK 14	1					
11	GB/T91-1.6x12	开口销φ1.6x12	PIN, COTTER φ1.6x12	1					
12	F4-01090200	阻力调整旋钮组件	BOLT, FRICTION ADJUSTING	1					
13	F4-08000012	标贴12	MARK 12	1					
14	F4-01090006	衬套	BUSH	1					
15	F4-01090007	压缩弹簧	SPRING, COMPRESSION	1					
16	GB/T848-10	小垫圈10	SMALL WASHER 10	1					
17	F4-01090303	油门标志牌	INDICATOR THROTTLE	1					
18	F4-01090301	操舵手柄塑胶套	GRIP, STEERING HARDLE	1					
19	F4-01090302	操舵手柄橡胶套	RUBBER, HANDLE	1					
20	GB/T820-M5x25	十字槽半沉头螺钉M5x25	SCREW M5×25	1					

零部件名称: 操舵系统

PARTS NAME: STEERING

SN. 参照号码	PART NO. 零件编号	DESCRIPTION 零件名称(中文)	DESCRIPTION 零件名称(英文)	QTY 数量					REMARKS 备注
21	GB/T827-2x5	标牌铆钉φ2x5	RINET φ2x5	1					
22	F4-01090300	操舵手柄组件	STEERING HANDLE ASSY	1					
23	F4-01090003	操舵手柄握把摩擦块	FRICTION	1					
24	F4-01090100	节气门杆组件	LEVER, THROTLLE	1					
25	GB/T818-M5x12	十字槽盘头螺钉M5x12	SCREW, PAN HEAD M5x12	2					
26	F4-01090002	节气门杆固定板	STAY	1					
27	F4-08000015	标志牌15	MARK 15	1					
28	F4-01090008	油门钢索组件	THROTTLE CABLE ASSY	1					
29	F4-01090401	引擎停止安全索	STOPER, HANG ROPE ASSY	1					
30	F4-01090400	急停开关组件	ENGINE STOP SWITCH ASSY	1					
31	F4-01090004	尼龙垫圈	WASHER , NYLON	1					

零部件名称:	水上装置壳体
PARTS NAME:	UPPER CASING

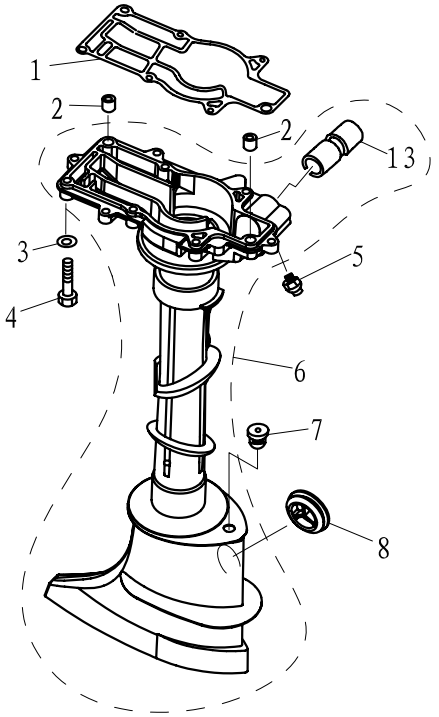

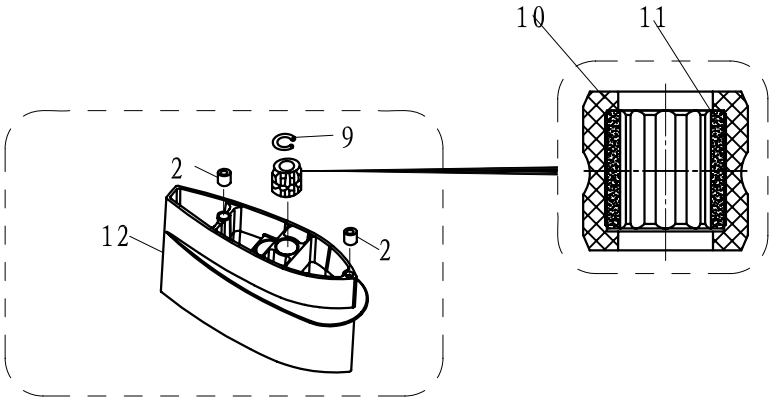

SN. 参照号码	PART NO. 零件编号	DESCRIPTION 零件名称(中文)	DESCRIPTION 零件名称(英文)	QTY 数量					REMARKS 备注
1	F4-00000006	发动机密封垫	GASKET ,ENGINE	1					
2	F4-00000001	空心定位销	PIN ,HOLLOW	4					S: 2件
3	GB/T97.1-6	平垫圈6	WASHER 6	7					
4	GB/T5783-M6X35	六角头螺栓M6×35	BOLT M6×35	7					
5	JB/T7940.1-M6	直通式压注油杯M6	GREASE CUP M6	1					
6	F4-02000100	水上装置壳体组件	UPPER CASING ASSY	1					
7	F4-02000011	变档轴密封圈	WASHER ,SHIFT ROD	1					
8	F4-02000012	水上装置橡胶堵头	RUBBER PLUG ,UPPER	2					
9	GB/T893.1-22	孔用弹性挡圈22	CIRCLIP 22	1					L
10	F4-02030003	驱动轴衬套橡胶套	RUBBER BUSHING	1					L
11	F4-02030002	驱动轴衬套	BUSHER ,DRIVE SHAFT	1					L
12	F4-02030001	接长体	EXTENSION	1					L
13	F4-02000002	水上装置壳体铜套	BUSHING,SHIFT ROD LEVER	1					

零部件名称:	水下驱动组件
PARTS NAME:	LOWER DRIVE ASSY

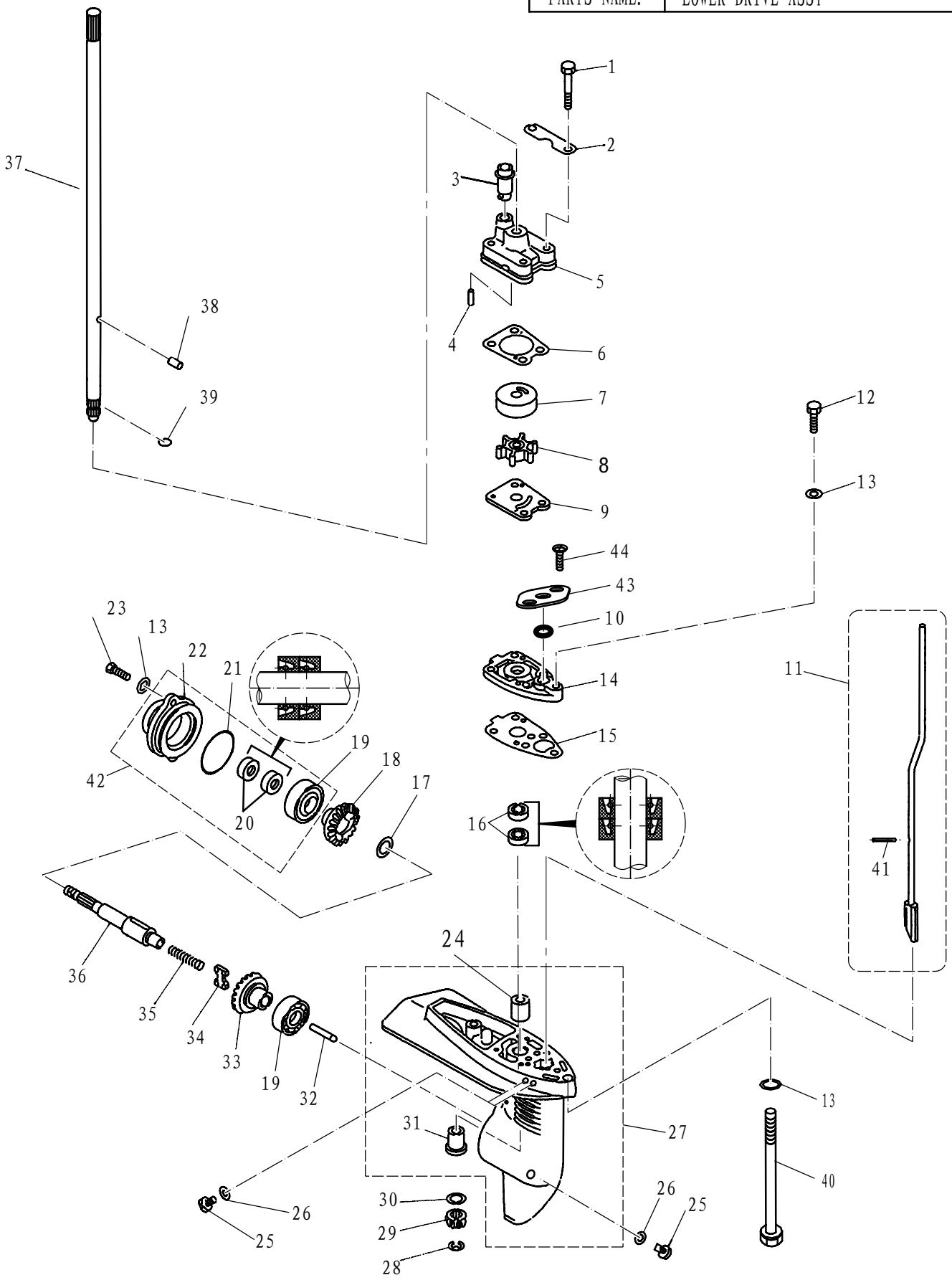

SN. 参照号码	PART NO. 零件编号	DESCRIPTION 零件名称(中文)	DESCRIPTION 零件名称(英文)	QTY 数量					REMARKS 备注
1	GB/T5782-M6x45	六角头螺栓M6×45	BOLT M6×45	4					
2	F4-03000020	泵壳固定板	PLATE ,WATER PUMP FIXED	2					

零部件名称: 水下驱动组件

PARTS NAME: LOWER DRIVE ASSY

SN. 参照号码	PART NO. 零件编号	DESCRIPTION 零件名称(中文)	DESCRIPTION 零件名称(英文)	QTY 数量					REMARKS 备注
3	F4-03000021	泵壳橡胶管	RUBBER TUBE ,WATER PUMP	1					
4	F4-03000013	水泵座定位销	PIN ,WATER PUMP	2					
5	F4-03000019	水泵壳	HOUSING ,WATER PUMP	1					
6	F4-03000018	泵壳密封垫	GASKET ,WATER PUMP COVER	1					
7	F4-03000017	水泵内壳	COVER ,INNER WATER PUMP	1					
8	F4-03060000	水泵叶轮	IMPELLER ,WATER PUMP	1					
9	F4-03000015	外档板	OUT PLATE	1					
10	F2.6-03000009	O形密封圈	O-RING	1					
11	F4-03020000	变档凸轮组件	CAM ASSY ,SHIFT ROD	1					L
	F4-03020000S	变档凸轮组件	CAM ASSY ,SHIFT ROD	1					S
12	GB/T5783-M6x25	六角头螺栓M6×25	BOLT M6×25	1					
13	GB/T97.1-6	平垫圈6	WASHER 6	5					
14	F4-03000012	水泵座	BASE ,WATER PUMP	1					
15	F4-03000011	水泵座密封垫	HERMETIC GASKET	1					
16	F4-03000027	油封 10.8×21×7	OIL SEAL	2					
17	F4-03000009	倒档齿轮垫圈	WASHER ,REVERSE GEAR	1					
18	F4-03040000	倒档齿轮组件	REVERSE GEAR ASSY	1					
19	GB/T276-6004C2	深沟球轴承6004C2	BEARING 6004C2	2					
20	F4-03050002	油封13×22×7	OIL SEAL	2					
21	JISB2401-P48	水下装置壳体盖O形圈	O-RING P48	1					
22	F4-03050001	水下装置壳体盖	COVER ,LOWER CASING	1					
23	GB/T5783-M6x20	六角头螺栓M6×20	HEXAGON BOLT M6×20	2					
24	F4-03000003	不带档边筒形轴承	BEARING	1					
25	F4-03000023	注油孔螺塞	PLUG ,OIL HOLE	3					
26	F4-03000024	注油孔螺塞密封垫	GASKET	3					
27	F4-03000001	水下装置壳体	LOWER CASING	1					
28	GB/T896-6	开口档圈6	CIRCLIP 6	1					
29	F4-03000007	主动齿轮	INITIATIVE GEAR	1					
30	F4-03000006	主动齿轮垫圈	WASHER ,INITIATIVE GEAR	1					
31	F4-03000002	带档边筒形轴承	BEARING	1					
32	F4-03000008	变档柱塞	PLUGER ,SHIFT	1					
33	F4-03010000	正档齿轮组件	POSITIVE GEAR ASSY	1					
34	F4-03030002	离合器块	CLUTCH BLOCK	1					
35	F4-03030003	离合器块压簧	SPRING ,CLUTCH BLOCK	1					
36	F4-03030001	螺旋桨轴	SHAFT ,PROPELLER	1					
37	F4-03000004	驱动轴	SHAFT ,DRIVE	1					L
	F4-03000004S	驱动轴	SHAFT ,DRIVE	1					S
38	F4-03000016	叶轮定位销	PIN	2					
39	F4-03000005	轴用钢丝档圈	CLIP	1					
40	GB/T5782-M6x170	六角头长螺栓M6×170	BOLT M6×170	2					L(S:M6×40)
41	GB/T879.4-1.5x20	弹性圆柱销 φ1.5×20	PIN ,SPRING φ1.5×20	1					
42	F4-03050000	水下装置壳体盖组件	COVER ASSY,LOWER CASING	1					
43	F4-03000028	O形圈挡板	PLATE,O-RING	1					
44	GB/T818-M5x6	十字槽盘头螺钉 M5x6	BOLT M5x6	2					

零部件名称:	水下装置壳体 & 驱动系统
PARTS NAME:	LOWER CASING & DRIVE

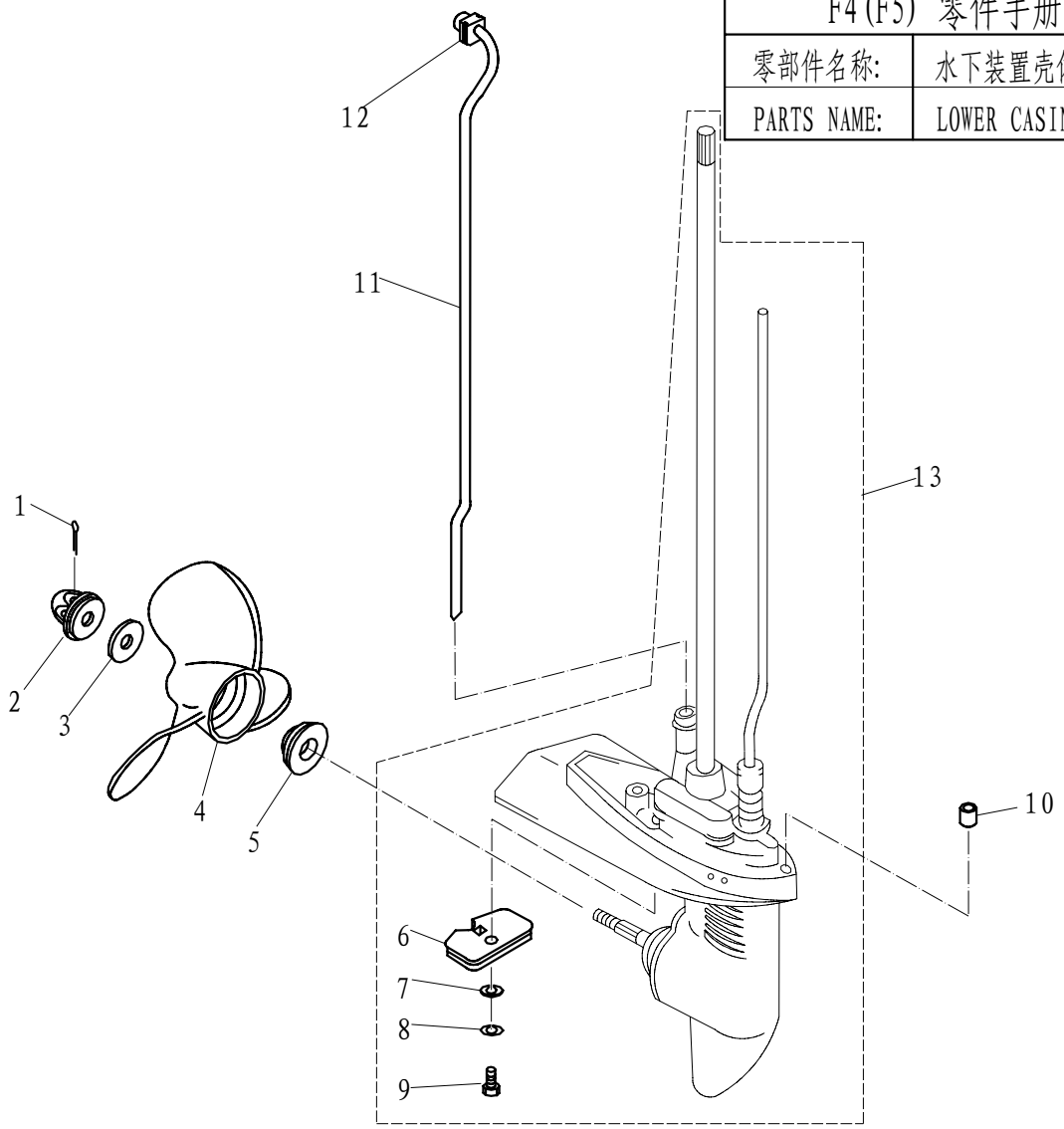

SN. 参照号码	PART NO. 零件编号	DESCRIPTION 零件名称(中文)	DESCRIPTION 零件名称(英文)	QTY 数量					REMARKS 备注
1	GB/T91-2.5x30	开口销φ2.5×30	PIN ,COTTER φ2.5×30	1					
2	F4-03080000	螺母组件	NUT ASSY	1					
3	F4-03000026	不锈钢垫片	WASHER	1					
4	F4-03070000	螺旋桨组件	PROPELLER ASSY	1					
5	F4-03000025	不锈钢垫块	SPACER	1					
6	F4-03000022	阳极	ANODE	1					
7	GB/T861.1-6	内齿锁紧垫圈6	WASHER ,INTERNAL TOOCH 6	1					
8	GB/T97.1-6	平垫圈6	WASHER 6	1					
9	GB/T5783-M6x14	六角头螺栓M6×14	HEXAGON BOLT M6×14	1					
10	F4-00000001	空心定位销	HOLLOW PIN	2					
11	F4-02040001	进水管	WATER TUBE ASSY	1					L
	F4-02040001S	进水管	WATER TUBE ASSY	1					S
12	F4-02040002	工形橡胶圈	I -SHAPED RUBBER BAND	1					
13	F4-03100000	水下装置壳体总成	LOWER CASING ASSY	1					L
	F4-03100000S	水下装置壳体总成	LOWER CASING ASSY	1					S

零部件名称:	点火系统
PARTS NAME:	IGNITOR ASSY

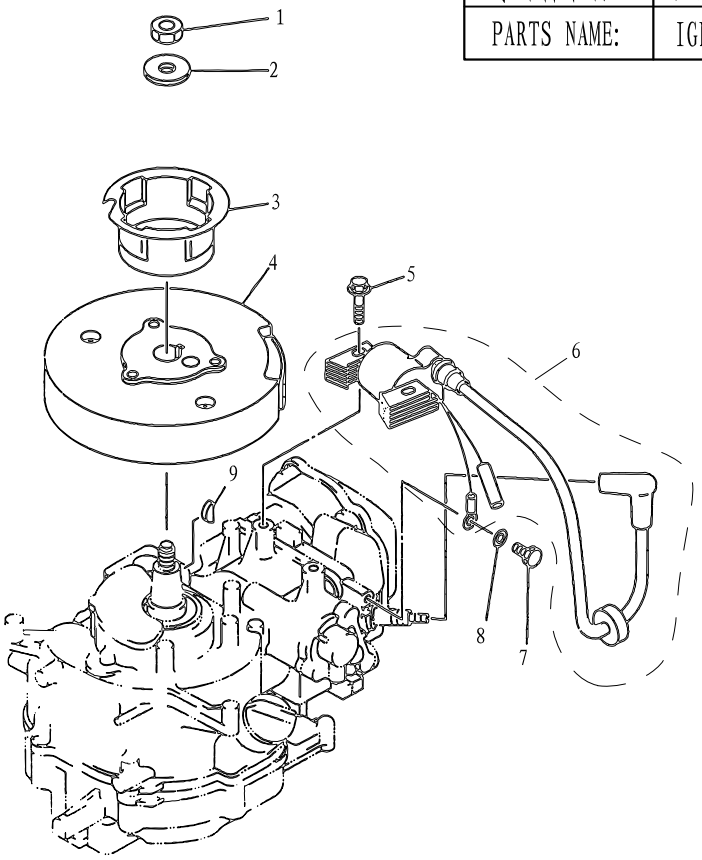

SN. 参照号码	PART NO. 零件编号	DESCRIPTION 零件名称(中文)	DESCRIPTION 零件名称(英文)	QTY 数量					REMARKS 备注
1	F4-04000026	六角螺母M10x1.25	NUT M10x1.25	1					
2	F4-04000021	飞轮垫圈	WASHER	1					
3	F4-04000020	起动轴套	PULLEY,STANTER	2					
4	F4-04100000	飞轮组件	FLY WHEEL	1					
5	GB/T5783-M6x25	六角头螺栓M6x25	BOLT M6x25	2					
6	F4-04000038	点火线圈组件	IGNITION WINDING ASSY	1					
7	GB/T5783-M6x12	六角头螺栓M6x12	BOLT M6x12	1					
8	GB/T97.1-6	平垫圈6	WASHER 6	3					
9	F4-04000019	半圆键	KEY	1					

零部件名称:	气缸&曲轴箱1
PARTS NAME:	CYLINDER & CRANKCASE 1

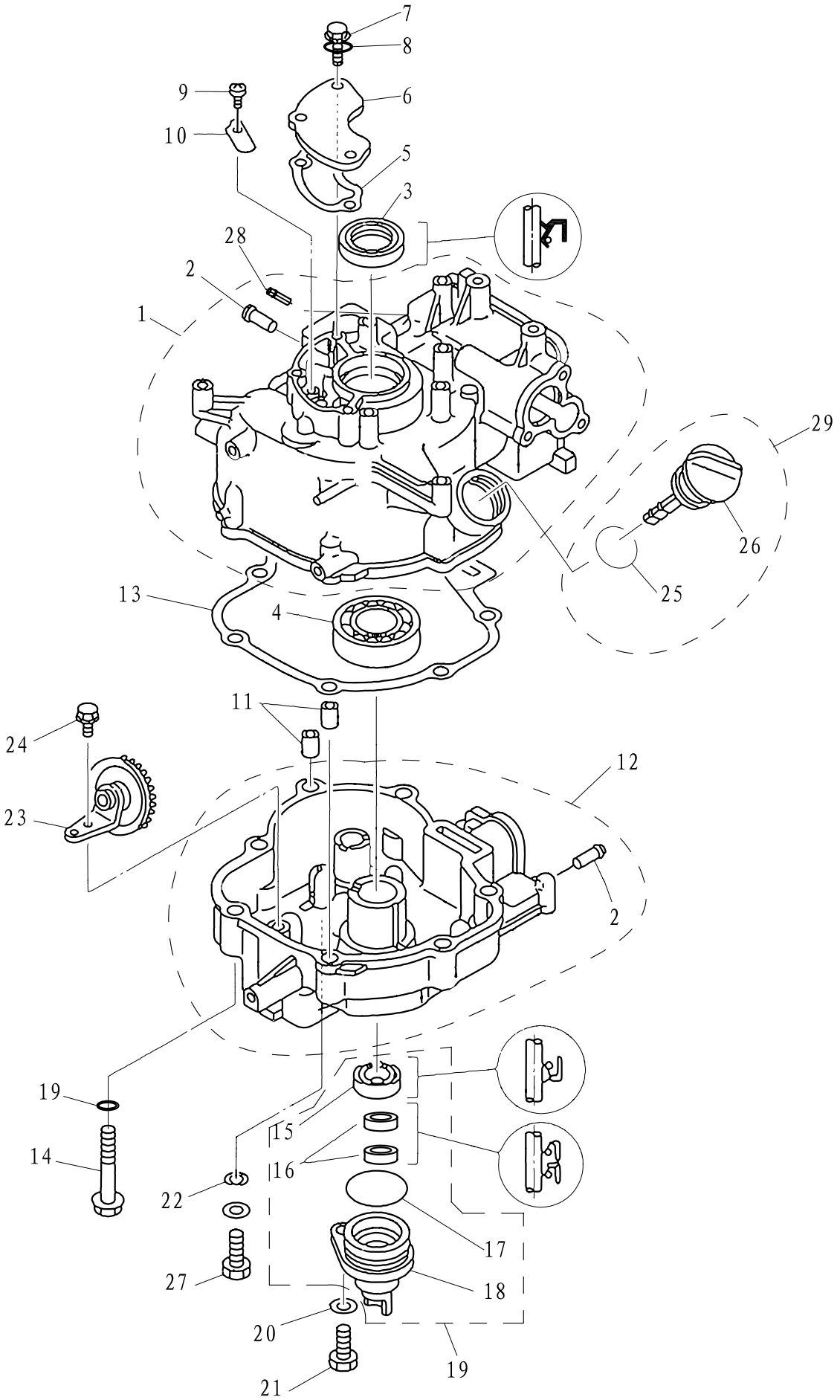

零部件名称: 气缸&曲轴箱1

PARTS NAME: CYLINDER & CRANKCASE 1

SN. 参照号码	PART NO. 零件编号	DESCRIPTION 零件名称(中文)	DESCRIPTION 零件名称(英文)	QTY 数量					REMARKS 备注
1	F4-04010100	曲轴箱体组件	CRANK CASE	1					
2	F4-04010102	气嘴	PIPE, JOINT	2					
3	F4-04010004	曲轴油封A25x40x5	OIL SEAL	1					
4	GB/T276-6205C3	深沟球轴承6205C3	BEARING 6205C3	1					
5	F4-04000009	呼吸器密封垫	BREATHER GASKET	1					
6	F4-04000010	呼吸器盖板	COVER	1					
7	GB/T5783-M6x14	六角头螺栓M6x14	BOLT M6x14	3					
8	GB/T97.1-6	平垫圈6	WASHER 6	3					
9	GB/T818-M4x6	十字槽盘头螺钉M4x6	SCREW, PAN HEAD M4x6	1					
10	F4-04010003	呼吸器阀片	VALVE, BREATHER FLAP	1					
11	F4-04000003	空心定位销φ10x8.4x14	HOLLOW PIN	2					
12	F4-04050200	曲轴箱盖组件	COVER, CRANK CASE	1					
13	F4-04000002	曲轴箱体复合垫	CRANKCASE COMPLEX GASKET	1					
14	F4-04000039	凸缘螺栓M8x50	BOLT, HEXAGON M8x50	7					
15	F2.6-04010001	曲轴油封20x30x7(B)	OIL SEAL	1					
16	F4-04060004	驱动轴上油封10.8x21x7	OIL SEAL	2					
17	F4-04060002	油封壳体O型圈	O-RING	1					
18	F4-04060001	油封壳体	SHELL, OIL SEAL	1					
19	F4-04060000	油封壳体组件	OIL SEAL SHELL ASSY	1					
20	GB/T97.1-8	平垫圈8	WASHER 8	8					
21	GB/T5783-M8x20	六角头螺栓M8x20	BOLT M8x20	1					
22	F4-04000006	放油螺栓密封垫	WASHER	1					
23	F4-04050100	甩油轮组件	GEAR UNIT ASSY	1					
24	GB/T5783-M6x12	六角头螺栓M6x12	BOLT M6x12	1					
25	F4-04000008	机油盖阻油圈	O-RING	1					
26	F4-04000007	带尺机油盖	PLUG WITH DIPSTICK	1					
27	F4-04000001	放油螺栓	BOLT, DISCHARGING OIL	1					
28	F2.6-04010103	出水嘴	WATER PIPE , OUT	1					
29	F4-04000010	带尺机油盖组件	PLUG WITH DIPSTICK ASSY	1					

零部件名称:	曲轴 & 活塞
PARTS NAME:	CRANKSHAFT & PISTON

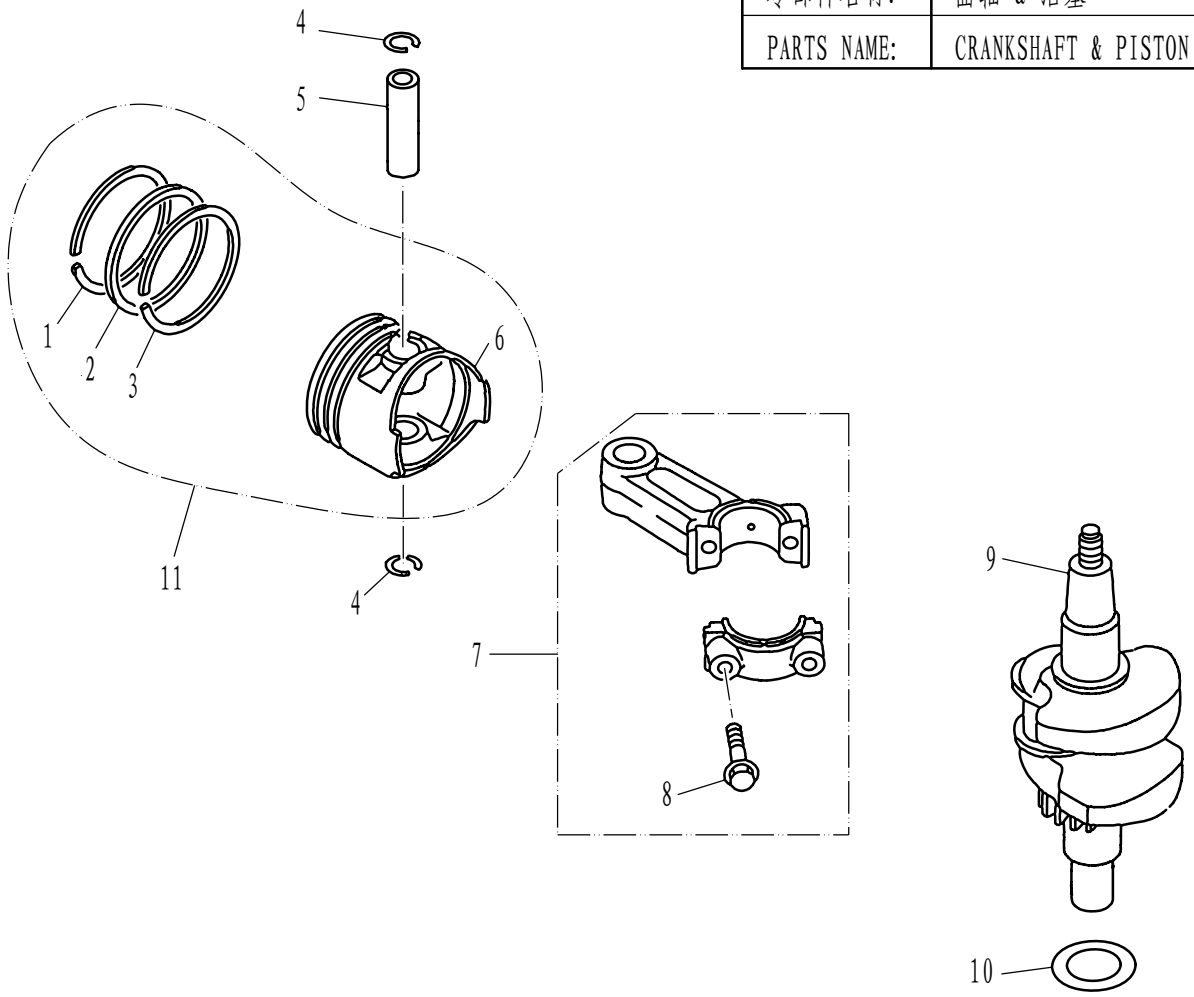

SN. 参照号码	PART NO. 零件编号	DESCRIPTION 零件名称(中文)	DESCRIPTION 零件名称(英文)	QTY 数量					REMARKS 备注
1	F4-04020002	气环1	PISTON RING 1	1					
2	F4-04020003	气环2	PISTON RING 2	1					
3	F4-04020004	组合油环	COMBINED OIL RING	1					
4	F4-04020006	活塞销卡簧	CIRCLIP	2					
5	F4-04020005	活塞销	PIN ,PISTON	1					
6	F4-04020001	活塞	PISTON	1					
7	F4-04020100	连杆组件	ROD ,CONNECTING	1					
8	F4-04020103	连杆螺栓	BOLT,ROD CLEVEL	2					
9	F4-04030000	曲轴组件	CRANK ASSY	1					
10	F4-04000004	箱盖减磨片	WASHER , PLATE	1					
11	F4-04020200	活塞组件	PISTON ASSY	1					

零部件名称:	凸轮轴&阀门
PARTS NAME:	CAMSHAFT & VALVE

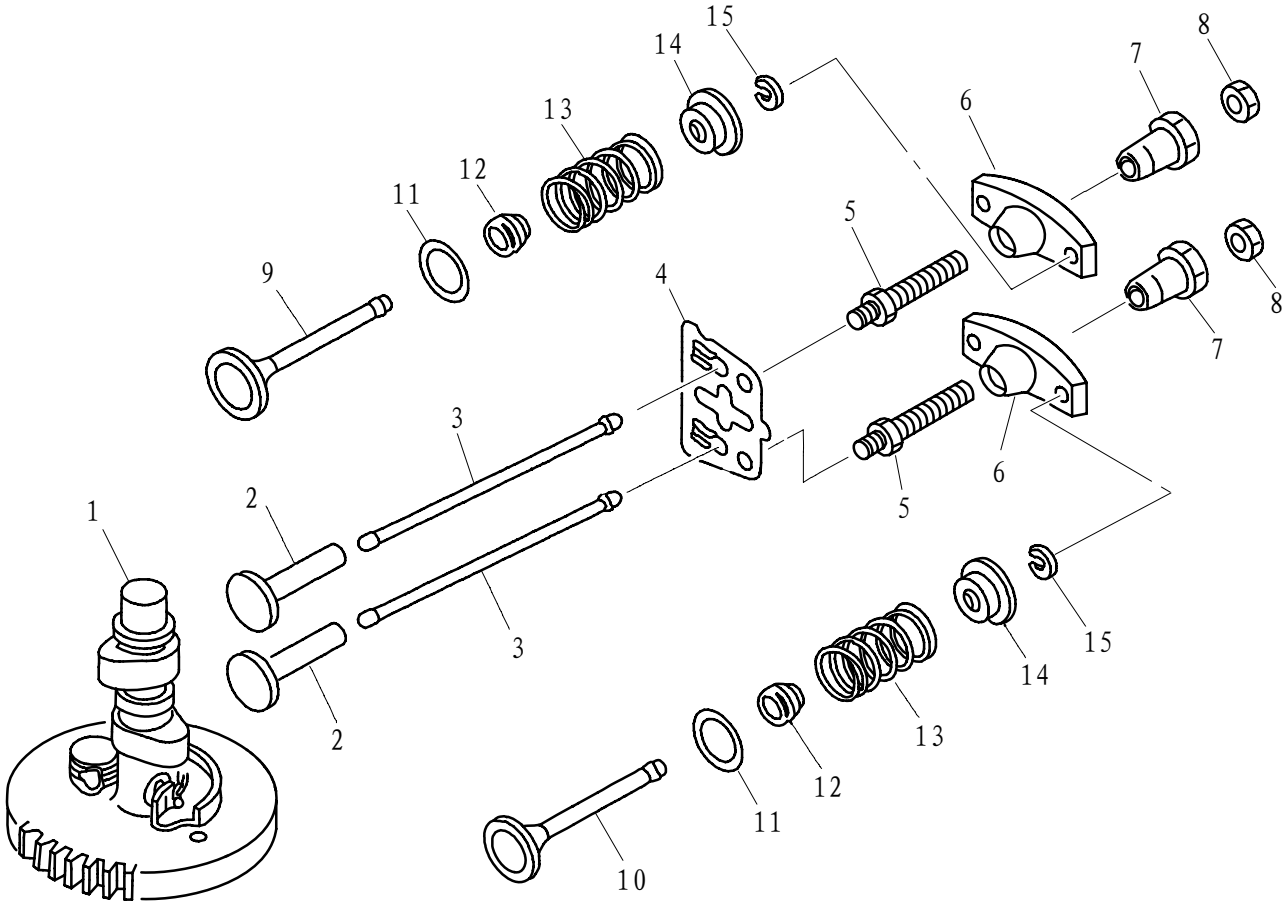

SN. 参照号码	PART NO. 零件编号	DESCRIPTION 零件名称(中文)	DESCRIPTION 零件名称(英文)	QTY 数量					REMARKS 备注
1	F4-04040000	凸轮减压组件	CAMSHAFT ASSY	1					
2	166F-000001	气门挺柱	LIFTER, VALVE	2					
3	F4-04000015	气门推杆	ROD, VALVE PUSH	2					
4	F4-04080009	导向板	PLATE, PUSH ROD	1					
5	166F-010008	摇臂螺杆	BOLT, ROCKER ARM	2					
6	166F-010009	气门摇臂	ARM, VALVE ROCKER	2					
7	166F-010010	摇臂球座	PIVOT, ROCKER ARM	2					
8	166F-010011	锁紧螺母M6x0.75	LOCKNUT M6×0.75	2					
9	F4-04080005	进气门	DOOR, INTAKE	1					
10	F4-04080006	排气门	DOOR, EXHAUST	1					
11	F4-04080007	气门弹簧垫圈	SEAT, VALVE SPRING	2					
12	166F-010003	气门油封	SEAT, VALVE STEM	2					
13	F4-04080008	气门弹簧	SPRING, VALVE INNER	2					
14	F4-04080010	气门弹簧座	SPRING, VALVE RETAINER	2					
15	166F-010006	气门锁片	CLAMP, VALVE	2					

零部件名称:	气缸 & 曲轴箱 2
PARTS NAME:	CYLINDER & CRANKCASE 2

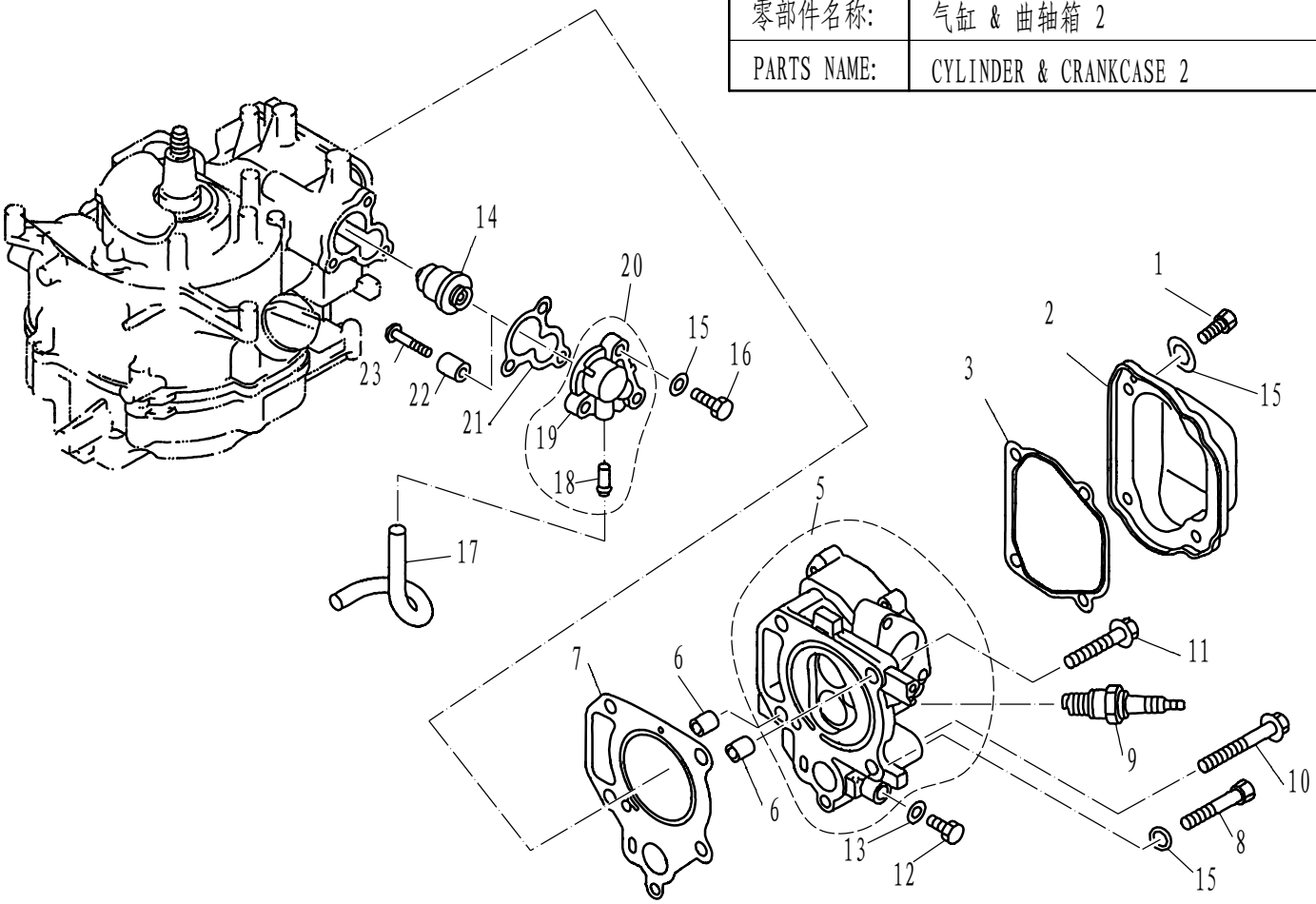

SN. 参照号码	PART NO. 零件编号	DESCRIPTION 零件名称(中文)	DESCRIPTION 零件名称(英文)	QTY 数量					REMARKS 备注
1	GB/T5783-M6x16	六角头螺栓M6×16	BOLT M6×16	4					
2	F4-04000018	缸头罩	COVER ,CYLINDER HEAD	1					
3	F4-04000017	缸头罩密封垫	GASKET ,CYLINDER COVER	1					
4									
5	F4-04080100	气缸头组件	CYLINDER HEAD ASSY	1					
6	F4-04000003	空心定位销	PIN ,HOLLOW	2					
7	F4-04000014	缸头复合垫	GASKET ,CYLINDER HEAD	1					
8	GB/T5782-M6x45	六角螺栓M6×45	BOLT M6x45	1					
9	BPR7HS	火花塞	PLUG ,SPARK	1					
10	F4-04000034	气缸头螺栓B	BOLT ,CYLINDER HEAD "A"	3					
11	F4-04000033	气缸头螺栓A	BOLT ,CYLINDER HEAD "B"	1					
12	GB/T5783-M8x14	六角螺栓 M8x14	BOLT M8x14	1					
13	F4-0400006	放油螺栓密封垫	WASHER , BOLT	1					
14	T15-04000010	节温器	THERMOSTAT	1					
15	GB/T97.1-6	平垫圈6	WASHER 6	8					
16	GB/T5783-M6x20	六角头螺栓M6×20	BOLT M6×20	3					
17	F4-04000012	回水管	PIPE ,RETURN	1					
18	F4-04010002	水咀	SPILE WATER	1					
19	F4-04070001	节温器盖	COVER ,THERMOSTAT	1					
20	F4-04070100	节温器盖水咀组件	COVER AND SPILE WATER ASSY	1					
21	F4-04000011	节温器盖密封垫	GASKET ,THERMOSTAT	1					
22	F4-04070003	节温器盖阳极	ANODE	1					
23	GB/T818-M5x25	十字槽盘头螺钉M5×25	SCREW ,PAN HEAD M5×25	1					

零部件名称:	燃油系统
PARTS NAME:	FUEL

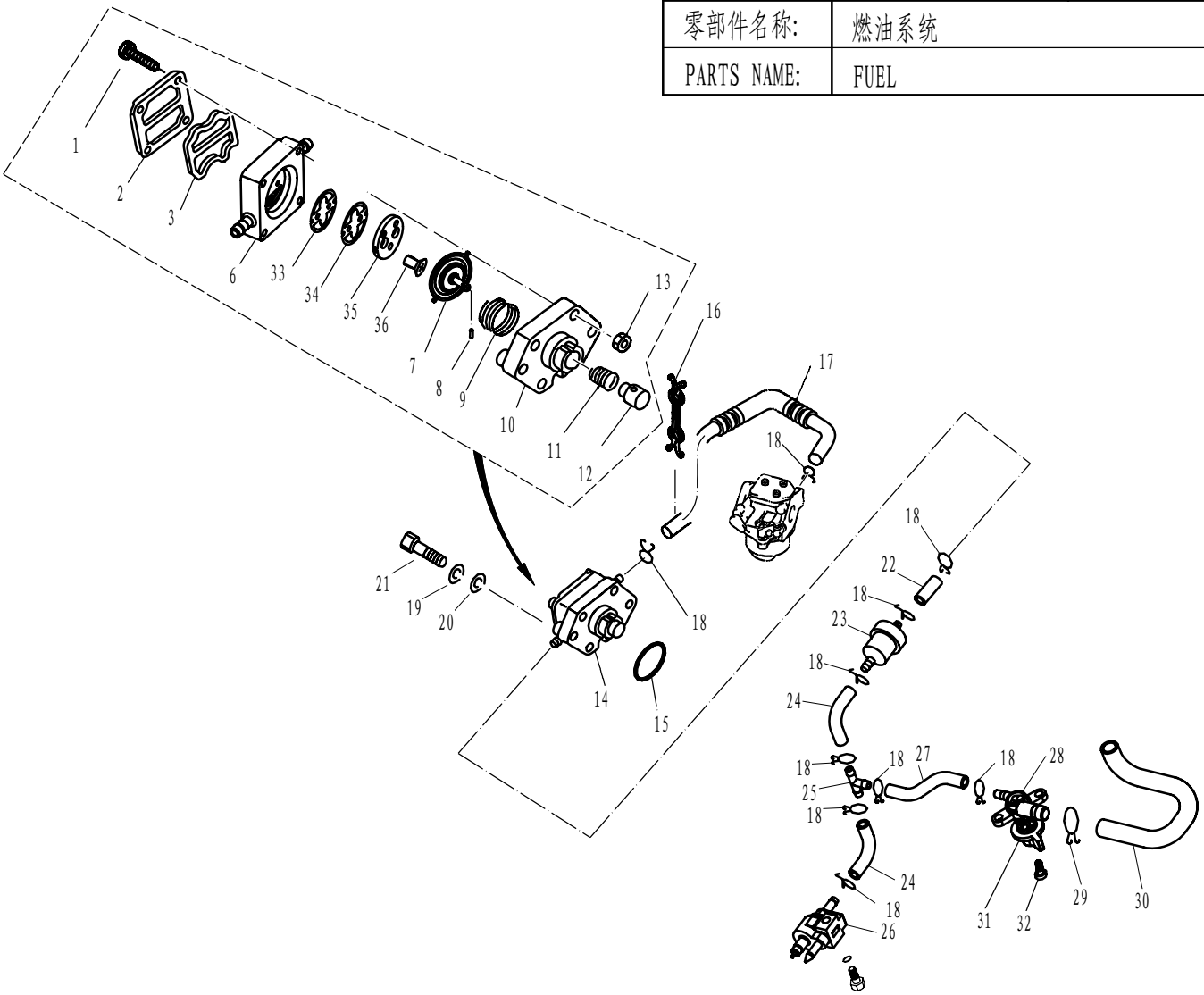

SN. 参照号码	PART NO. 零件编号	DESCRIPTION 零件名称(中文)	DESCRIPTION 零件名称(英文)	QTY 数量					REMARKS 备注
1	GB/T823-M4x25	十字槽小盘头螺钉M4×25	SCREW ,SMALL PAN HEAD M4×25	4					
2	F4-04090003	燃油泵盖	COVER ,FUEL PUMP	1					
3	F4-04090004	上隔膜	DIAPHRAGM ,TOP	1					
4									
5									
6	F4-04090100A	燃油泵壳	FUEL PUMP SHELL	1					
7	F4-04090100	隔膜组件	DIAPHRAGM ASSY	1					
8	GB/T309-3x12	滚针φ3×12	ROLLER NEEDLE φ3×12	1					
9	F4-04090008	隔膜弹簧	SPRING ,DIAPHRAGM	1					
10	F4-04090001	燃油泵座	SEAT ,FUEL PUMP	1					
11	F4-04090007	柱塞弹簧	SPRING ,PLUNGER	1					
12	F4-04090006	柱塞	PLUNGER	1					
13	GB/T6170-M4	螺母M4	NUT M4	4					
14	F4-04090000	燃油泵组件	FUEL PUMP ASSY	1					
15	F4-04090009	燃油泵座O形圈	O-RING	1					
16	F4-04000031-2	尼龙管夹(B)	CLIP ,NYLON "B"	1					
17	F4-04000028	燃油管E	PIPE ,FUEL "E"	1					φ10×φ5×260
18	F4-04000030	油管夹簧B	SPRING ,FUEL PIPE "B"	9					
19	GB/T93-6	弹簧垫圈6	WASHER ,SPRING 6	2					
20	GB/T97.1-6	平垫圈6	WASHER 6	2					

零部件名称: 燃油系统

PARTS NAME: FUEL

SN. 参照号码	PART NO. 零件编号	DESCRIPTION 零件名称(中文)	DESCRIPTION 零件名称(英文)	QTY 数量					REMARKS 备注
21	GB/T5783-M6x30	六角头螺栓M6×30	BOLT M6×30	2					
22	F4-05000008	燃油管D	PIPE ,FUEL "D"	1					φ10×φ5×60
23	F4-05000300	燃油过滤器组件	FUEL FILTER ASSY	1					
24	F4-05000007	燃油管C	PIPE ,FUEL "C"	1					
25	F15-05000011	三通	THREE THROUGH	1					
26	F4-05000200	燃油管接头组件	FUEL PIPE TIE-IN ASSY	1					
27	F4-05000006	燃油管B	PIPE ,FUEL "B"	1					
28	F4-05000100	油开关	OIL SWITCH	1					
29	F4-05000010	油管夹簧A	SPRING ,OIL TUBE CLAMP	1					
30	F4-05000005	燃油管A	PIPE FUEL "A"	1					
31	F4-05000101	油开关旋钮	SWICH ,GASOLINE	1					
32	GB/T818-M4x12	十字槽盘头螺钉 M4×12	SCREW ,PAN HEAD M4×12	1					
33	F4-04090001A	瓣膜B	VALVE "B"	1					
34	F4-04090002A	瓣膜A	VALVE "A"	1					
35	F4-04090003A	隔膜限位块	LIMITING BLOCK,SEPTUM	1					
36	GB/T819.2-M3x5	十字槽盘头螺钉 M3x5	SCREW ,PAN HEAD M3x5	2					

零部件名称:	进气系统
PARTS NAME:	INTAKE

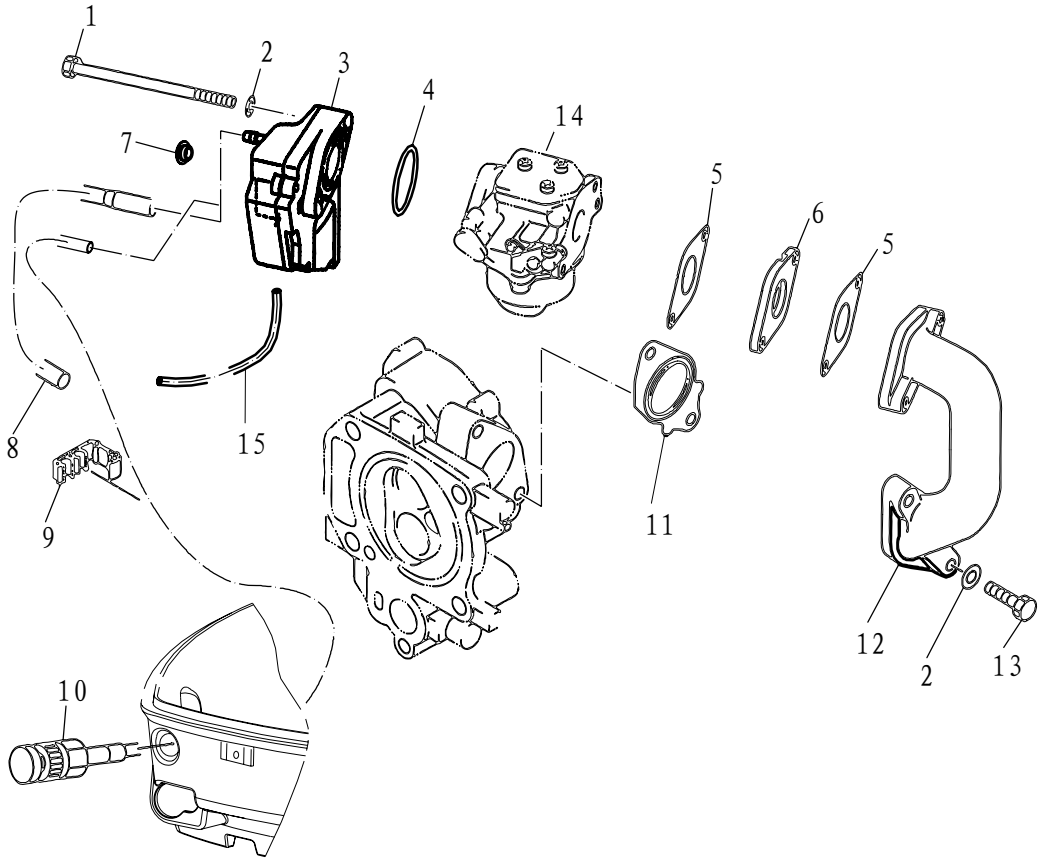

SN. 参照号码	PART NO. 零件编号	DESCRIPTION 零件名称(中文)	DESCRIPTION 零件名称(英文)	QTY 数量					REMARKS 备注
1	GB/T5782-M6x90	六角头螺栓M6×90	BOLT M6×90	2					
2	GB/T97.1-6	平垫圈6	WASHER 6	4					
3	F4-04110000	进气消音器组件	SILENCER ASSY ,INTAKE	1					
4	JASO F404-2-24-031	O形密封圈 24-031	O-RING 24-031	1					
5	F4-04000024	化油器密封垫	GASKET ,CARBURETOR AIRPROOF	2					
6	F4-04000025	化油器垫块	GASKET ,CARBURETOR	1					
7	F4-04110003	消音器堵塞	JAM	2					
8	F4-04000035	回气管	PIPE ,RETURN GAS	1					
9	F4-04000031-1	尼龙管夹（A）	CLAMP ,NYLON "A"	1					
10	F4-05000400	阻风门拉柄组件	CHOKE HANDLE ASSY	1					
11	F4-04000022	进气弯管密封垫	GASKET ,INNER PIPE	1					
12	F4-04000023	进气歧管	MANIFOLD ,INTAKE	1					
13	GB/T5783-M6x25	六角头螺栓M6×25	BOLT M6×25	2					
14	F4-04140000	化油器	CARBURETOR	1					
15	F4-04000036	回气管	PIPE	1					ϕ2×ϕ7×85

零部件名称:	内燃油箱
PARTS NAME:	INNER FUEL TANK

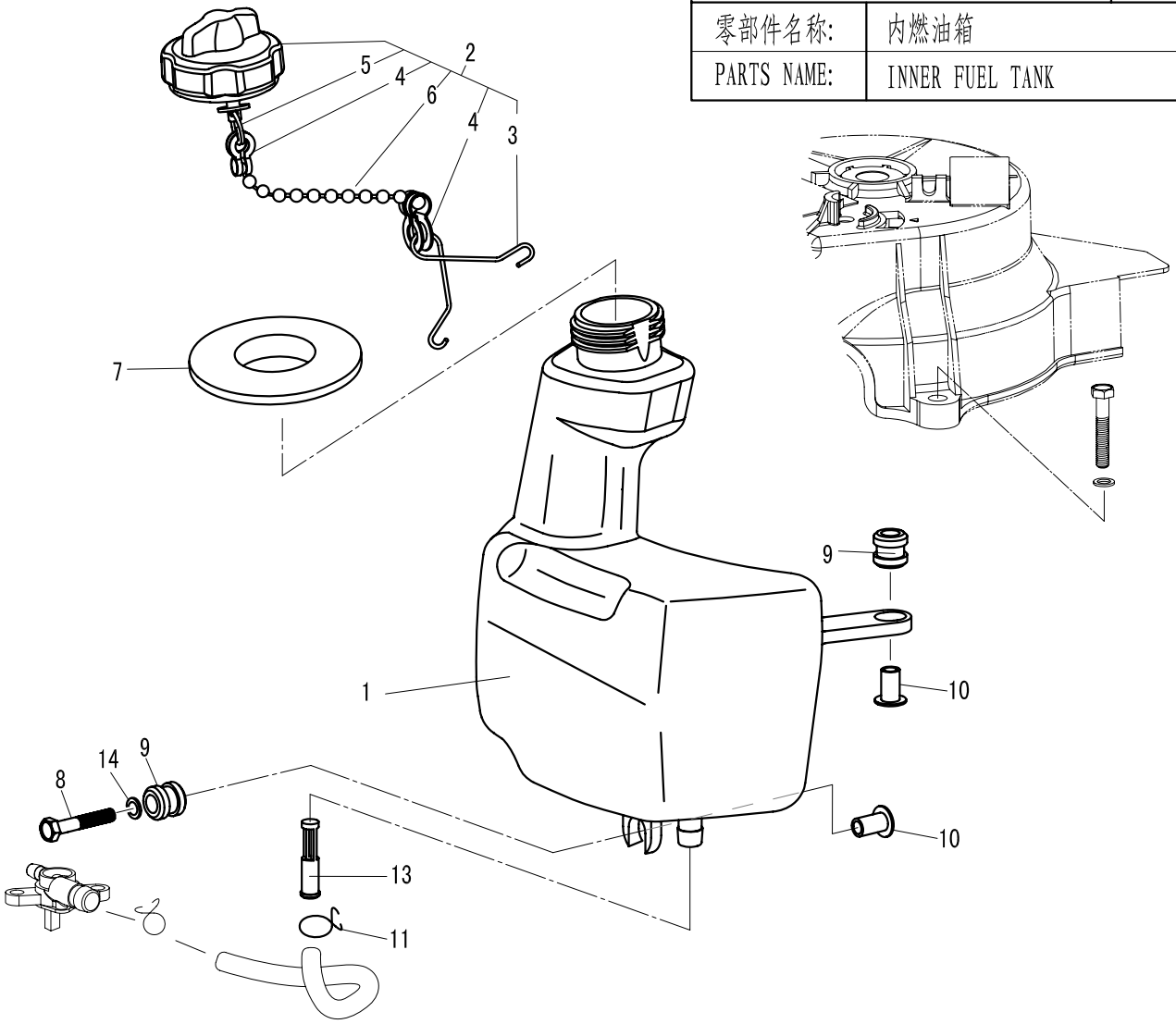

SN. 参照号码	PART NO. 零件编号	DESCRIPTION 零件名称(中文)	DESCRIPTION 零件名称(英文)	QTY 数量					REMARKS 备注
1	F4-04120001	油箱	TANK	1					
2	F4-04120100	油箱盖组件	TANK COVER ASSY	1					
3	F4-04120103	防脱落扭簧	SPRING ,PREVENT DESQUAMATING	1					
4	F4-04120105	防脱落双环	SHEET METAL ,PREVENT DESQUAMATING	2					
5	F4-04120106	钢丝锁圈	EYELET,STEEL WIRE	1					
6	F4-04120104	防脱链	CHAIN ,PREVENT DESQUAMATING	1					
7	F4-04120111	油箱盖橡胶密封垫	GASKET ,TANK COVER	1					
8	GB/T5783-M6x25	六角头螺栓M6×25	BOLT M6×25	1					
9	F4-04120002	油箱减震器	DAMPER ,TANK	3					
10	F4-04120003	减震器衬管	BUSH ,DAMPER	3					
11	F4-04000030	油管夹簧B	CLIP ,OIL PIPE "B"	2					
12	F4-05000005	燃油管A	PIPE ,FUEL "A"	1					
13	F4-04120005	油箱滤油芯	STRAINER ,TANK	1					
14	GB/T97.1-6	平垫圈6	WASHER 6	1					

零部件名称:	起动器组件
PARTS NAME:	STARTER

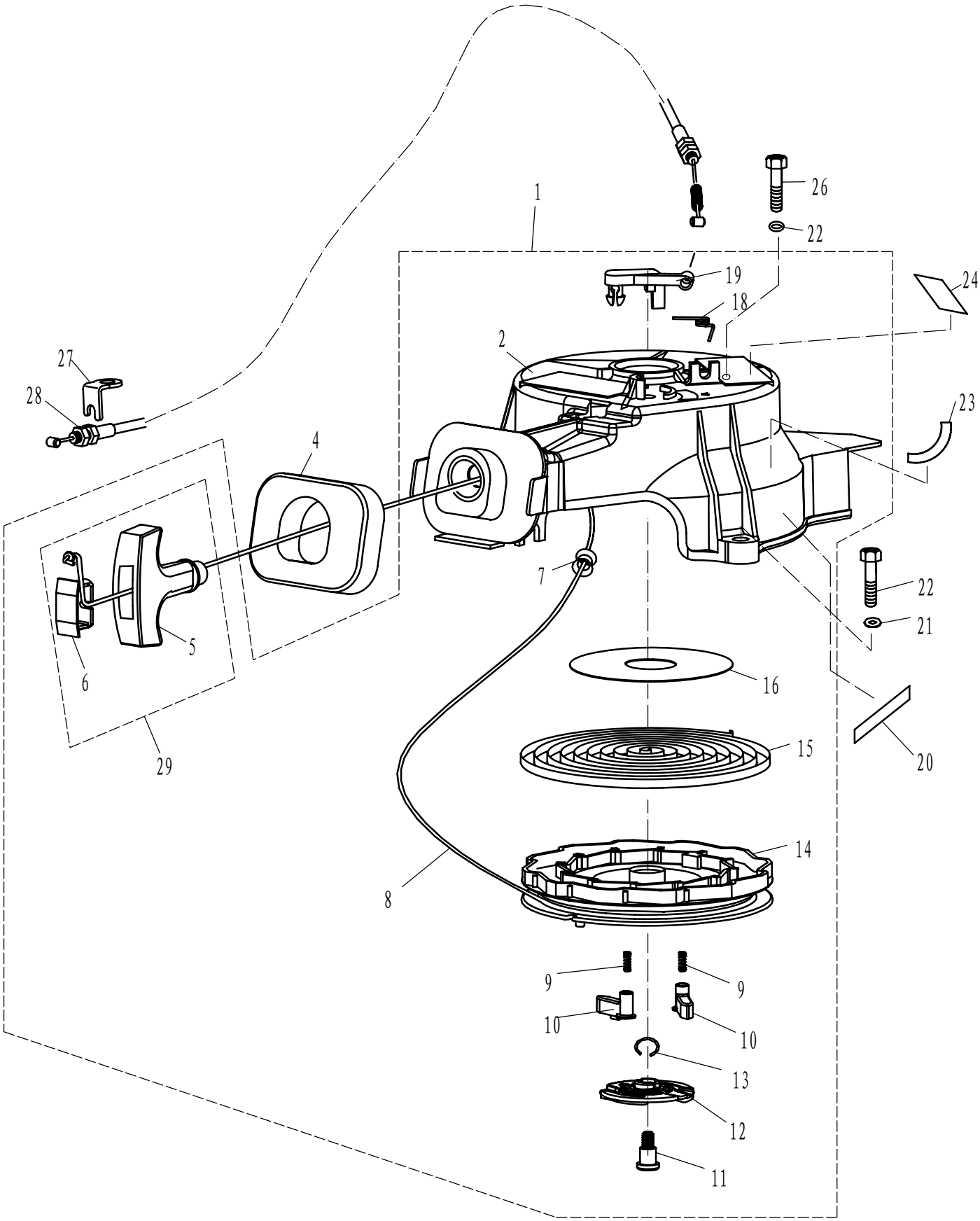

零部件名称: 起动器组件

PARTS NAME: STARTER

SN. 参照号码	PART NO. 零件编号	DESCRIPTION 零件名称(中文)	DESCRIPTION 零件名称(英文)	QTY 数量					REMARKS 备注
1	F4-04130000	起动器组件	STARTER ASSY	1					
2	F4-04130001	起动器外壳	CASE, STARTER	1					
3									
4	F4-04130018	起动减震块	SEAL, RUBBER	1					
5	F4-04130101	起动手柄	HANDLE, STARTER	1					
6	F4-04130102	起动手柄盖	COVER	1					
7	F4-04130013	起动绳导管	MEATUS, START ROPE	1					
8	F4-04130011	锦纶编织线φ4.5x1.80m	WIRE, STARTER	1					
9	F4-04130004	卡瓣弹簧	SPRING, DRIVE	2					
10	F4-04130003	卡瓣	PAWL, DRIVE	2					
11	F4-04130008	起动压板螺钉	BOLT, STARTER	1					
12	F4-04130006	起动压板	PLATE, PRELL	1					
13	F4-04130007	起动压板夹簧	SPRING, PLATE	1					
14	F4-04130019	起动轮	DRULL, SHEAVE	1					
15	F4-04130005	涡形弹簧	SPRING, VOLUTE	1					
16	F4-04130014	起动轮减磨片	WASHER, THRUST	1					
17									
18	F4-04130010	制动器扭簧	WREST SPRING, DETENT	1					
19	F4-04130009	制动器	DETENT	1					
20	F4-08000013	标贴13	MARK 13	1					
21	GB/T97.1-6	平垫圈6	WASHER 6	3					
22	GB/T5783-M6x35	六角头螺栓M6×35	BOLT M6×35	2					
23	F4-08000009	标贴9	MARK 9	1					
24	F4-08000016	标贴16	MARK 16	1					
25									
26	GB/T5783-M6x20	六角头螺栓M6×20	BOLT M6×20	1					
27	F4-04000005	钢索固定架	FIXED PLATE, TIGHTWIRE	1					
28	F4-02000013	制动器钢索组件	TIGHTWIRE ASSY, DETENT	1					
29	F4-04130100	起动手柄组件	STARTER HADLE ASSY	1					

零部件名称:	底罩
PARTS NAME:	BOTTOM COWLING

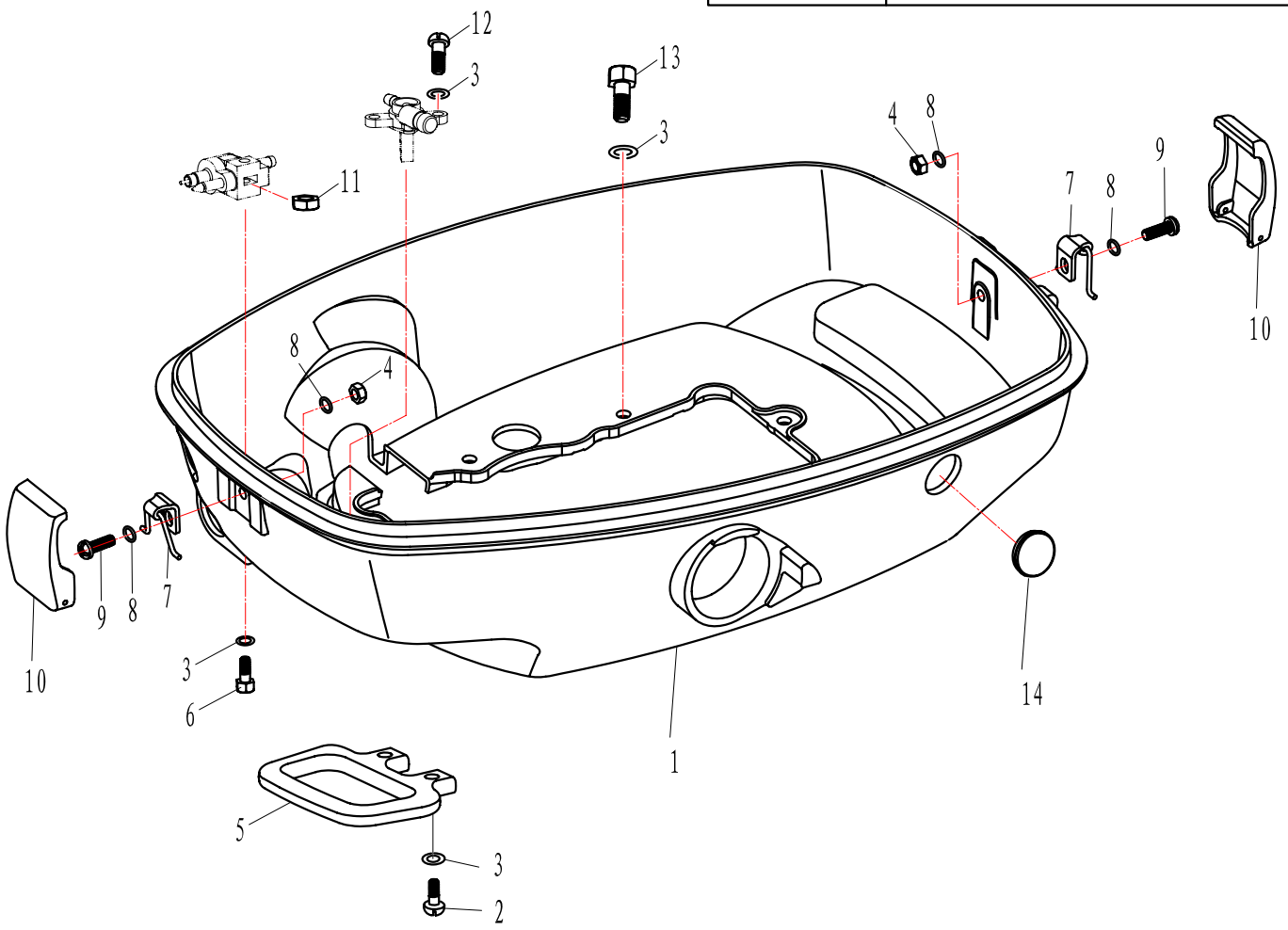

SN. 参照号码	PART NO. 零件编号	DESCRIPTION 零件名称(中文)	DESCRIPTION 零件名称(英文)	QTY 数量					REMARKS 备注
1	F4-05000001-A	底罩	BOTTOM COWLING	1					
2	GB/T818-M6x14	十字槽盘头螺钉M6x14	SCREW, PAN HEAD M6x14	2					
3	GB/T97.1-6	平垫圈6	WASHER 6	12					
4	GB/T889.1-M5	非金属嵌件六角锁紧螺母M5	LOCKNUT M5	2					
5	F4-05000016	手把	HANDLE	1					
6	GB/T5783-M6x25	六角头螺栓M6x25	BOLT M6x25	1					
7	F4-05000020	顶罩锁紧钩座组件	SEAT ASSY, LOCKING HOOK	2					
8	GB/T97.1-5	平垫圈 5	WASHER 5	4					
9	GB/T818-M5x16	十字槽盘头螺钉M5x16	SCREW, PAN HEAD M5x16	2					
10	F4-05000023	顶罩锁紧钩	HOOK, LOCK	2					
11	GB/T6170-M6	六角螺母 M6	NUT M6	1					
12	GB/T818-M6x12	十字槽盘头螺钉M6x12	SCREW, PAN HEAD M6x12	2					
13	GB/T5783-M6x14	六角头螺栓M6x14	BOLT M6x14	7					
14	F4-05000013-2	橡胶闷盖B	COVER, RUBBER	1					

零部件名称:	顶罩
PARTS NAME:	TOP COWLING

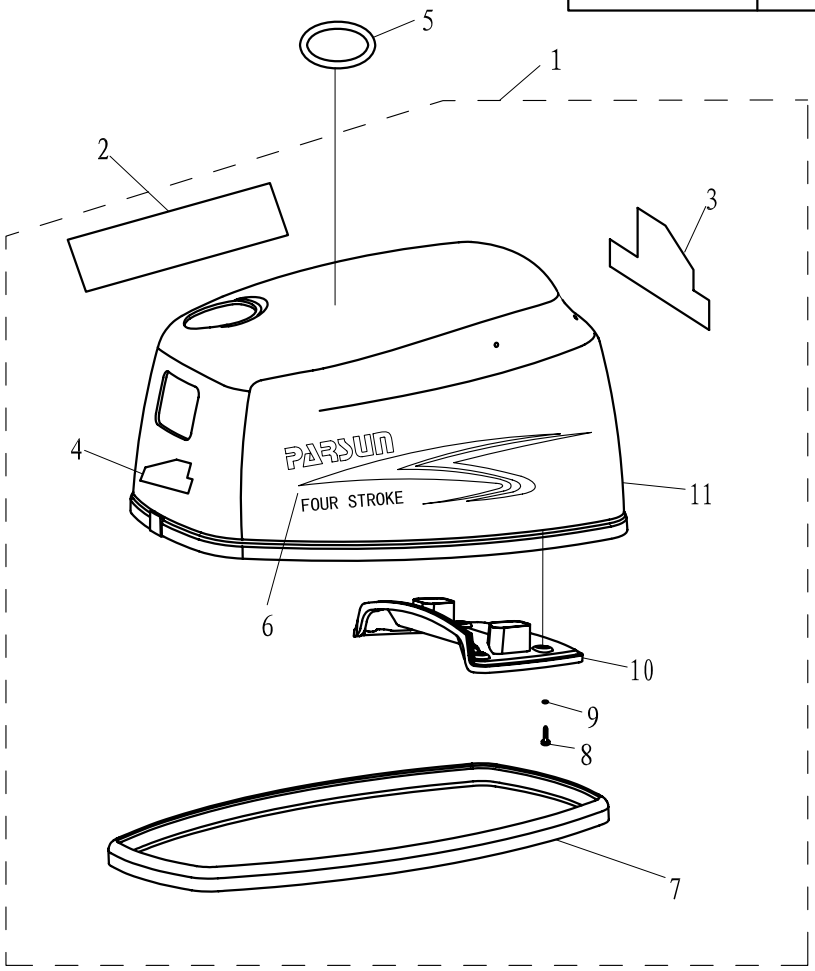

SN. 参照号码	PART NO. 零件编号	DESCRIPTION 零件名称(中文)	DESCRIPTION 零件名称(英文)	QTY 数量					REMARKS 备注
1	F4-06000000	顶罩组件	TOP COWLING ASSY	1					
2	F4-08000001	标贴1	MARK 1	1					
3	F4-08000003	标贴3	MARK 3	1					F4
	F4-08000005	标贴5	MARK 5	1					F5
4	F4-08000004	标贴4	MARK 4	1					F4
	F4-08000006	标贴6	MARK 6	1					F5
5	F4-08000019	标贴19	MARK 19	1					
6	F4-08000002	标贴2	MARK 2	1					
7	F4-06000002	密封橡胶条	BAR RUBBER, AIRPROOF	1					
8	GB/T845-ST5.5x19	十字槽盘头自攻螺钉ST5.5x19	SCREW, TAPPING ST5.5x19	4					
9	F4-06000004	橡胶垫片	UNDERLAY, RUBBER	4					
10	F4-06000003-A	顶罩消音盖	COVER, TOPCOWING MUFFLING	1					
11	F4-06000001-A	顶罩	TOP COWLING	1					

零部件名称:	外燃油箱(12L)
PARTS NAME:	OUTER FUEL TANK(12L)

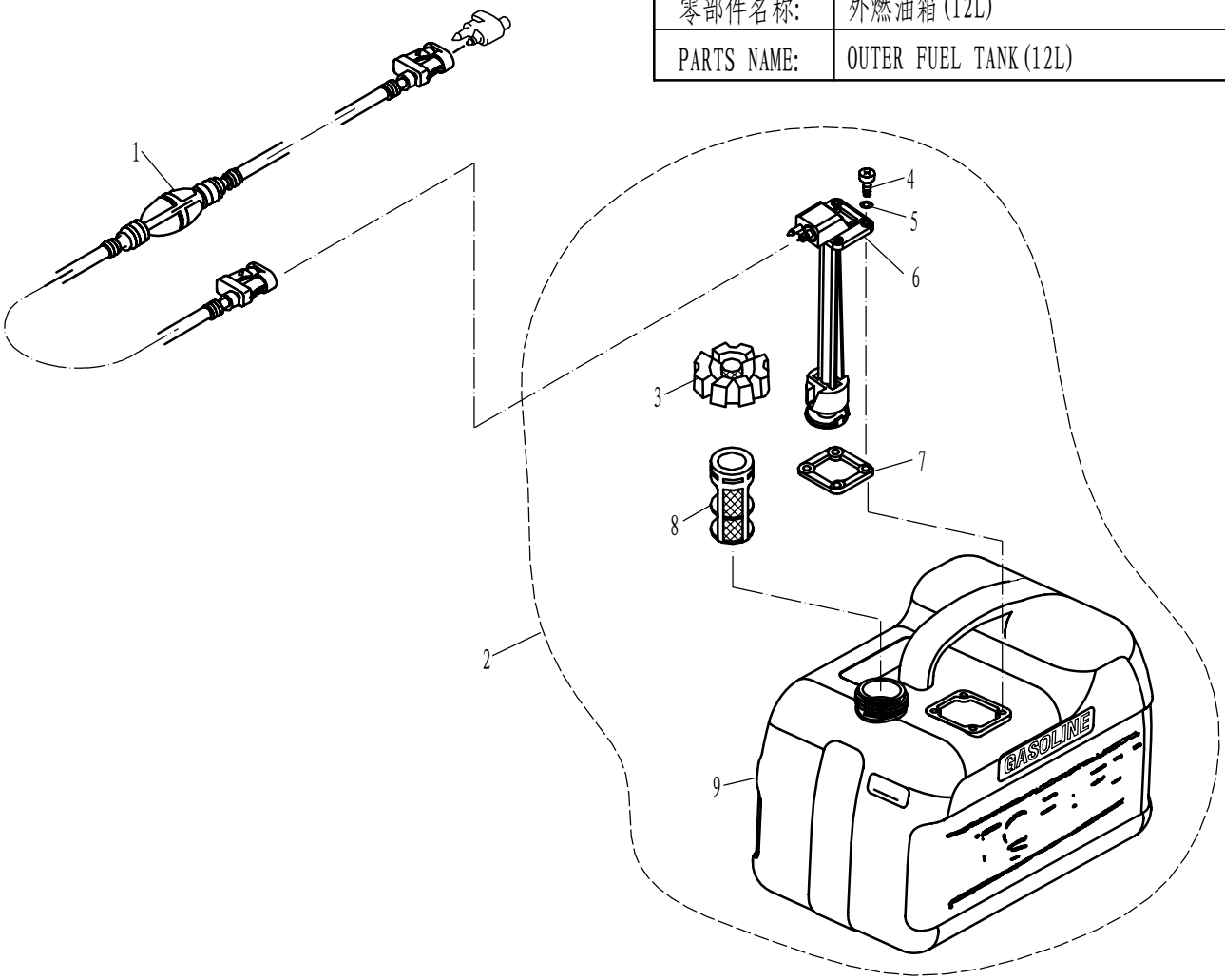

SN. 参照号码	PART NO. 零件编号	DESCRIPTION 零件名称(中文)	DESCRIPTION 零件名称(英文)	QTY 数量					REMARKS 备注
1	F15-09000000	油管总成	OIL TUBE ASSY	1					
2	F8-10000000	油箱组件	FUEL TANK ASSY	1					
3	F15-10010000	油箱盖组件	COVER ASSY,FUEL TANK	1					
4	GB/T818-M5x16	十字槽盘头螺钉M5×16	SCREW ,PAN HEAD M5x16	4					
5	GB/T97.1-5	平垫圈5	WASHER 5	4					
6	F15-10020000	油量计总成	OLEOMETER ASSY	1					
7	F15-10000003	衬垫	GASKET	1					
8	F15-10000002	油箱滤网	STRAINER	1					
9	F8-10000001	油箱本体	FUEL TANK	1					(12L)

零部件名称:	气缸头总成（修理件）
PARTS NAME:	CYLINDER HEAD ASSY (REPARE KIT)

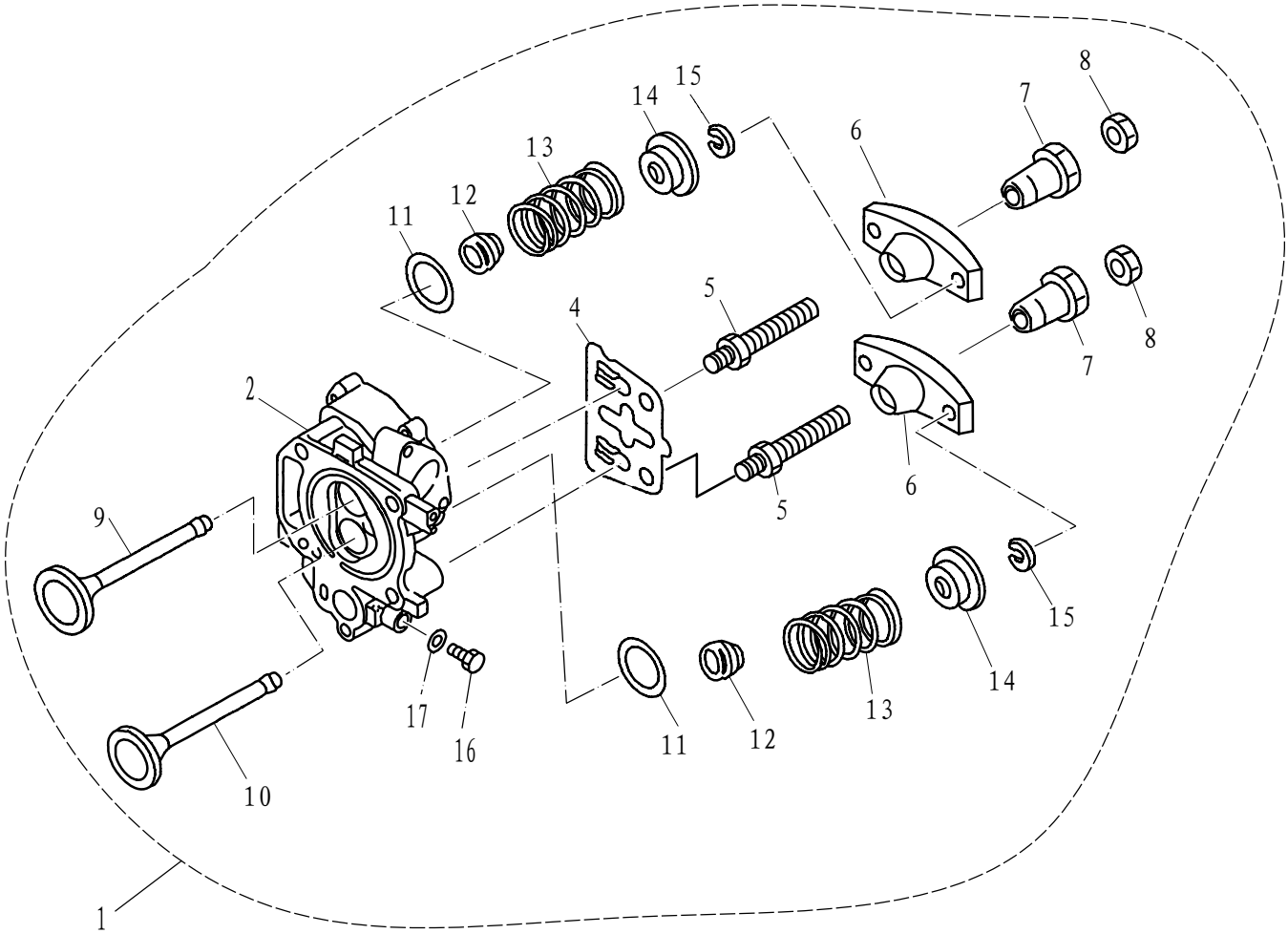

SN. 参照号码	PART NO. 零件编号	DESCRIPTION 零件名称(中文)	DESCRIPTION 零件名称(英文)	QTY 数量					REMARKS 备注
1	F4-040800000	气缸头总成	CYLINDER HEAD ASSY	1					
2	F4-04080101	气缸头	CYLINDER HEAD	1					
3									
4	F4-04080009	导向板	PLATE, PUSH ROD	1					
5	166F-010008	摇臂螺杆	BOLT, ROCKER ARM	2					
6	166F-010009	气门摇臂	ARM, VALVE ROCKER	2					
7	166F-010010	摇臂球座	PIVOT, ROCKER ARM	2					
8	166F-010011	锁紧螺母M6x0.75	LOCKNUT M6×0.75	2					
9	F4-04080005	进气门	DOOR, INTAKE	1					
10	F4-04080006	排气门	DOOR, EXHAUST	1					
11	F4-04080007	气门弹簧垫圈	SEAT, VALVE SPRING	2					
12	166F-010003	气门油封	SEAT, VALVE STEM	2					
13	F4-04080008	气门弹簧	SPRING, VALVE INNER	2					
14	F4-04080010	气门弹簧座	SPRING, VALVE RETAINER	2					
15	166F-010006	气门锁片	CLAMP, VALVE	2					
16	GB/T5783-M8x14	六角螺栓 M8x14	BOLT M8x14	1					
17	F4-04000006	放油螺栓密封垫	WASHER, BOLT	1					

零部件名称:	发动机头组件（修理件）
PARTS NAME:	ENGINE ASSY (REPARE KIT)

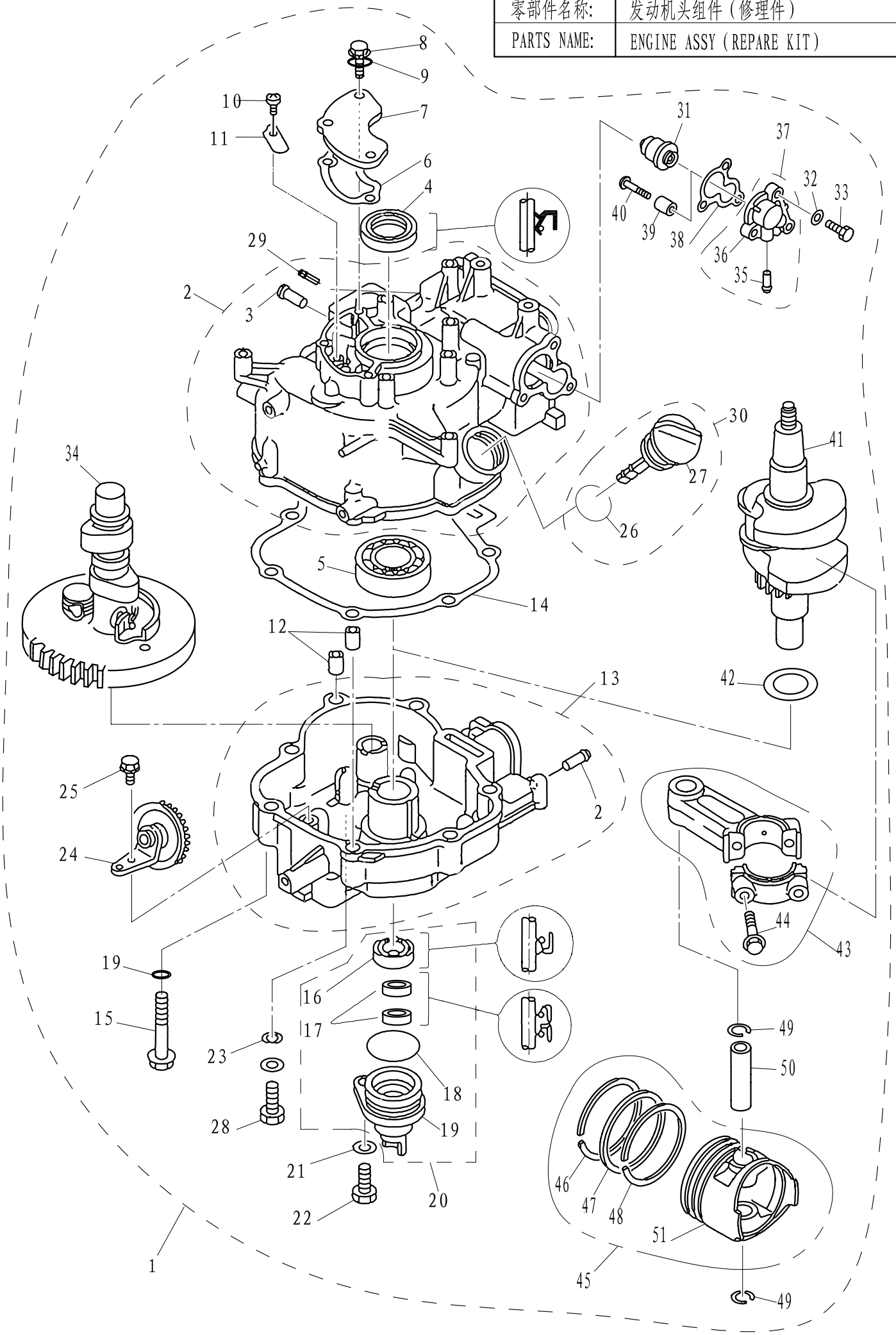

零部件名称: 发动机头组件（修理件）

PARTS NAME: ENGINE ASSY（REPARE KIT）

SN. 参照号码	PART NO. 零件编号	DESCRIPTION 零件名称(中文)	DESCRIPTION 零件名称(英文)	QTY 数量					REMARKS 备注
1	F4-04150000	发动机头组件	ENGINE ASSY	1					
2	F4-04010100	曲轴箱体组件	CRANK CASE	1					
3	F4-04010102	气嘴	PIPE, JOINT	2					
4	F4-04010004	曲轴油封A25x40x5	OIL SEAL	1					
5	GB/T276-6205C3	深沟球轴承6205C3	BEARING 6205C3	1					
6	F4-04000009	呼吸器密封垫	BREATHER GASKET	1					
7	F4-04000010	呼吸器盖板	COVER	1					
8	GB/T5783-M6x14	六角头螺栓M6x14	BOLT M6x14	3					
9	GB/T97.1-6	平垫圈6	WASHER 6	3					
10	GB/T818-M4x6	十字槽盘头螺钉M4x6	SCREW, PAN HEAD M4x6	1					
11	F4-04010003	呼吸器阀片	VALVE, BREATHER FLAP	1					
12	F4-04000003	空心定位销φ10x8.4x14	HOLLOW PIN	2					
13	F4-04050200	曲轴箱盖组件	COVER, CRANK CASE	1					
14	F4-04000002	曲轴箱体复合垫	CRANKCASE COMPLEX GASKET	1					
15	F4-04000039	凸缘螺栓M8x50	BOLT, HEXAGON M8x50	7					
16	F2.6-04010001	曲轴油封20x30x7(B)	OIL SEAL	1					
17	F4-04060004	驱动轴上油封10.8x21x7	OIL SEAL	2					
18	F4-04060002	油封壳体O型圈	O-RING	1					
19	F4-04060001	油封壳体	SHELL, OIL SEAL	1					
20	F4-04060000	油封壳体组件	OIL SEAL SHELL ASSY	1					
21	GB/T97.1-8	平垫圈8	WASHER 8	8					
22	GB/T5783-M8x20	六角头螺栓M8x20	BOLT M8x20	1					
23	F4-04000006	放油螺栓密封垫	WASHER	1					
24	F4-04050100	甩油轮组件	GEAR UNIT ASSY	1					
25	GB/T5783-M6x12	六角头螺栓M6x12	BOLT M6x12	1					
26	F4-04000008	机油盖阻油圈	O-RING	1					
27	F4-04000007	带尺机油盖	PLUG WITH DIPSTICK	1					
28	F4-04000001	放油螺栓	BOLT, DISCHARGING OIL	1					
29	F2.6-04010103	出水嘴	WATER PIPE , OUT	1					
30	F4-04000010	带尺机油盖组件	PLUG WITH DIPSTICK ASSY	1					
31	T15-04000010	节温器	THERMOSTAT	1					
32	GB/T97.1-6	平垫圈6	WASHER 6	8					
33	GB/T5783-M6x20	六角头螺栓M6×20	BOLT M6×20	3					
34	F4-04040000	凸轮减压组件	CAMSHAFT ASSY	1					
35	F4-04010002	水咀	SPILE WATER	1					
36	F4-04070001	节温器盖	COVER , THERMOSTAT	1					
37	F4-04070100	节温器盖水咀组件	COVER AND SPILE WATER ASSY	1					
38	F4-04000011	节温器盖密封垫	GASKET , THERMOSTAT	1					
39	F4-04070003	节温器盖阳极	ANODE	1					
40	GB/T818-M5x25	十字槽盘头螺钉M5×25	SCREW , PAN HEAD M5×25	1					
41	F4-04030000	曲轴组件	CRANK ASSY	1					
42	F4-04000004	箱盖减磨片	WASHER , PLATE	1					
43	F4-04020100	连杆组件	ROD , CONNECTING	1					

零部件名称: 发动机头组件(修理件)

PARTS NAME: ENGINE ASSY(REPARE KIT)

SN. 参照号码	PART NO. 零件编号	DESCRIPTION 零件名称(中文)	DESCRIPTION 零件名称(英文)	QTY 数量					REMARKS 备注
44	F4-04020103	连杆螺栓	BOLT,ROD CLEVEL	2					
45	F4-04020100	活塞组件	PISTON ASSY	1					
46	F4-04020002	气环1	PISTON RING 1	1					
47	F4-04020003	气环2	PISTON RING 2	1					
48	F4-04020004	组合油环	COMBINED OIL RING	1					
49	F4-04020006	活塞销卡簧	CIRCLIP	2					
50	F4-04020005	活塞销	PIN ,PISTON	1					
51	F4-04020001	活塞	PISTON	1					

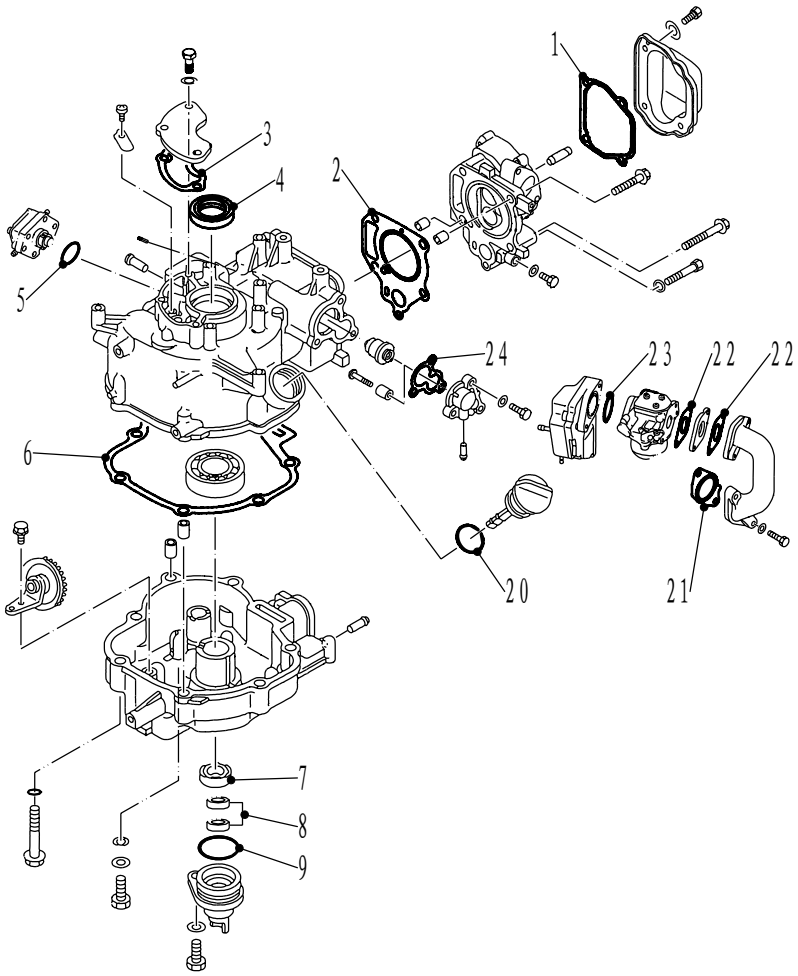
1
2
3
4
5
6
7
8
9
20
21
22
22
23
24

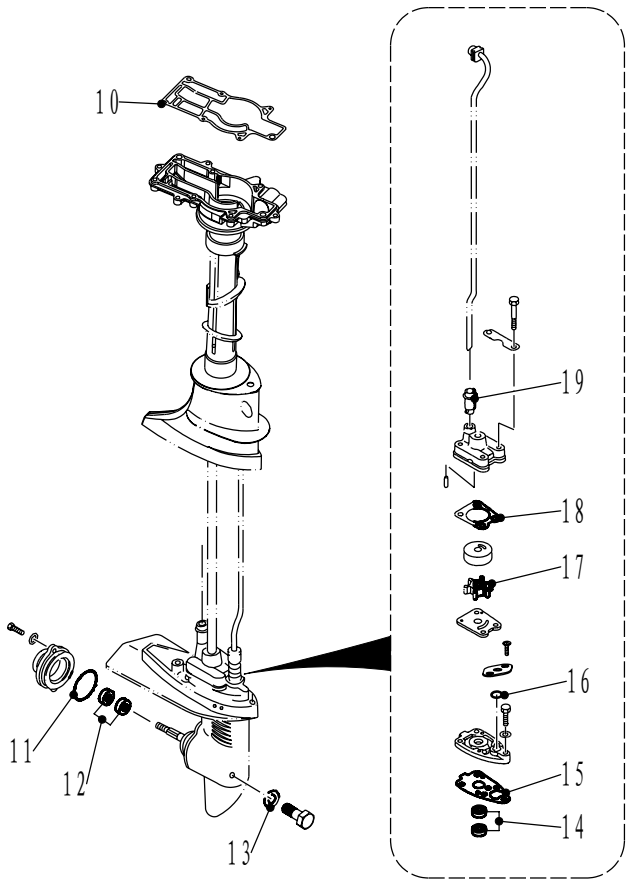
10
11
12
13
14
15
16
17
18
19

零部件名称: 附录(修理件)

PARTS NAME: APPENDIX (REPARE KIT)

SN. 参照号码	PART NO. 零件编号	DESCRIPTION 零件名称(中文)	DESCRIPTION 零件名称(英文)	QTY 数量					REMARKS 备注
1	F4-04000017	缸头罩密封垫	GASKET,CYLINDER COVER	1					
2	F4-04000014	缸头复合垫	GASKET,CYLINDER HEAD	1					
3	F4-04000009	呼吸器密封垫	BREATHER GASKET	1					
4	F4-04010004	曲轴油封A 25×40×5	OIL SEAL	1					
5	F4-04090009	燃油泵座O形圈	O-RING	1					
6	F4-04000002	曲轴箱体复合垫	CRANA CASE COMPLEX GASKET	1					
7	F2.6-04010001	曲轴油封B 20×30×7	OIL SEAL	1					
8	F4-04060004	驱动轴上油封 10.8×21×7	OIL SEAL	2					
9	F4-04060002	油封壳体O形圈	O-RING	1					
10	F4-00000006	发动机密封垫	GASKET, ENGINE	1					
11	JISB2401-P48	水下装置壳体盖O形圈	O-RING	1					
12	F4-03050002	油封 13×22×7	OIL SEAL	2					
13	F4-03000024	注油孔螺塞垫圈	GASKET	3					
14	F4-03000027	油封 10.8×21×7	OIL SEAL	2					
15	F4-03000011	水泵座密封垫	GASKET,WATER PUMP	1					
16	F2.6-03000009	O形密封圈	O-RING	1					
17	F4-03060000	水泵叶轮	IMPELLER,WATER PUMP	1					
18	F4-03000018	泵壳密封垫	GASKET,WATER PUMP COVER	1					
19	F4-03000021	泵壳橡胶管	RUBBER TUBE,WATER PUMP	1					
20	F4-04000008	机油盖阻油圈	O-RING	1					
21	F4-04000022	进气弯管密封垫	GASKET,INNER PIPE	1					
22	F4-04000024	化油器密封垫	GASKET,CARBURETOR ARIPROOF	2					
23	JASO F404-2-24-031	O形密封圈 24-031	O-RING 24-031	1					
24	F4-04000011	节温器盖密封垫	GASKET,THERMOSTAT	1					

零件手册		PAGE OF
零部件名称:	化油器总成	
PARTS NAME:	F4-04140000	

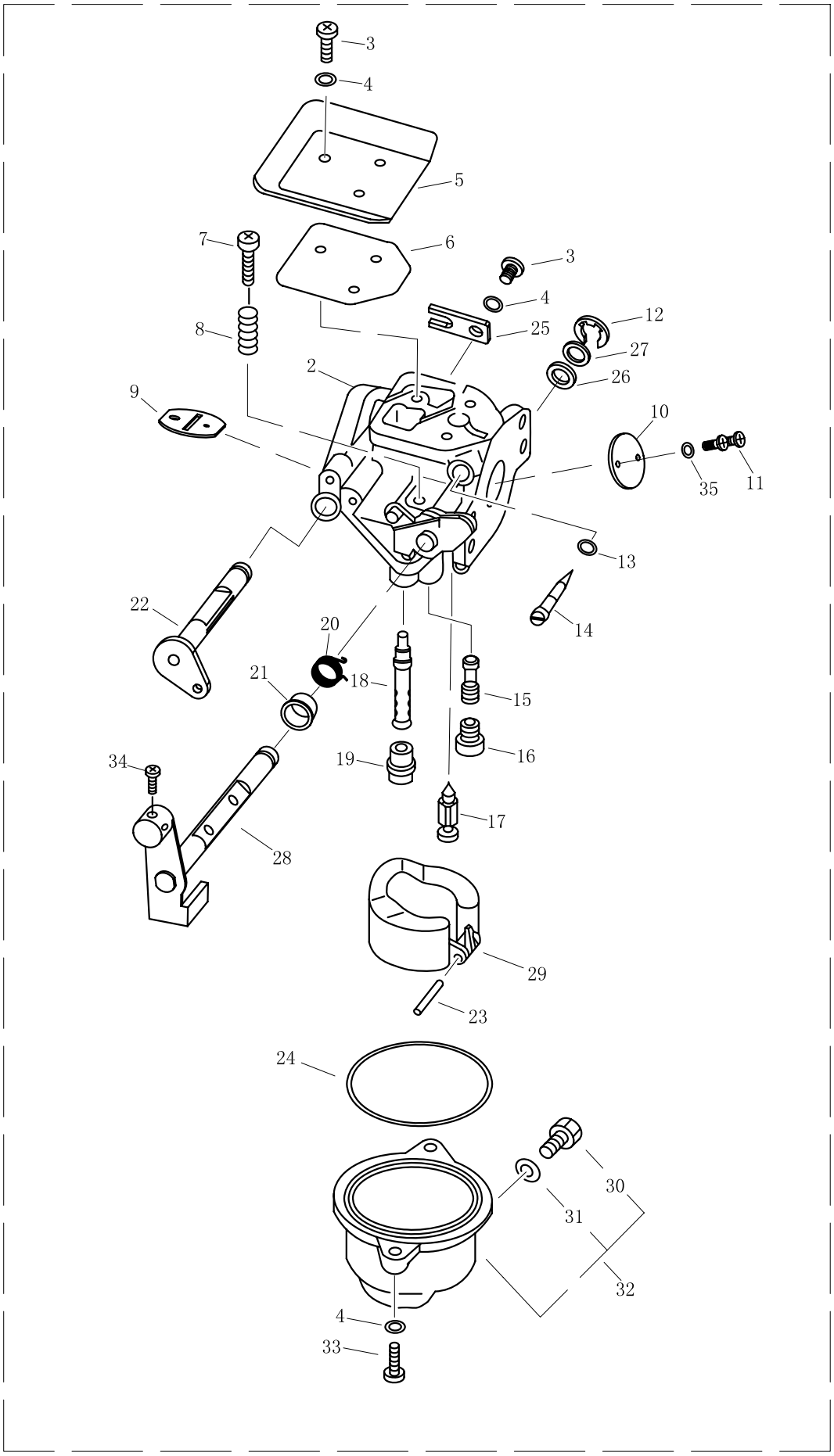

零件手册

PAGE OF

零部件名称: 化油器总成

PARTS NAME: F4-04140000

SN. 参照号码	PART NO. 零件编号	DESCRIPTION 零件名称(中文)	DESCRIPTION 零件名称(英文)	QTY 数量					REMARKS 备注
1	F4-04140000	化油器总成	CARBURETOR ASSY	1					
2	F4-04140001	化油器本体	CARBURETOR	1					
3	GB/T818-M4X10	十字槽盘头螺钉M4X10	BOLT	4					
4	GB/T94.1-4	弹性垫圈4	WASHER , SPRING	7					
5	F4-04140002	面板	PLATE	1					
6	F4-04140003	衬垫	GASKET	1					
7	F4-04140004	油门止动螺钉	BOLT	1					
8	F4-04140005	油门止动螺钉弹簧	SPRING, THORTTEL	1					
9	F4-04140006	阻风门挡板	APRON, CHOKE	1					
10	F4-04140007	油门挡板	APRON, ACCELERATOR	1					
11	GB/T818-M3X6	十字槽盘头螺钉M3X6	BOLT	2					
12	GB/T94.1-4	开口挡圈4	CIRCLIP	1					
13	F4-04140008	怠速螺钉O型圈	SEAL	1					
14	F4-04140009	怠速调节螺钉	SCREW, AIR ADJUSTING	1					
15	F4-04140010	空气减速量孔	JET, AIR SLOW	1					
16	F4-04140011	主量孔	JET, MAIN	1					
17	F4-04140012	针阀	VALVE, NEEDLE	1					
18	F4-04140013	主喷嘴	NOZZLE, MAIN	1					
19	F4-04140014	胶帽	RUBBER CAP	1					
20	F4-04140015	扭簧	WRING SPRING	1					
21	F4-04140016	油门摆杆衬套	BUSH, LINK	1					
22	F4-04140017	阻风门摆杆	LINK, CHOKE	1					
23	F4-04140018	浮子销	PIN, FLOAT	1					
24	F4-04140019	油杯O型圈	SEAL	1					
25	F4-04140020	阻风门压板	PLATE, CHOKE	1					
26	F4-04140021	油门摆杆垫圈	WASHER	1					
27	F4-04140022	油门摆杆尼龙垫圈	NYLON WASHER	1					
28	F4-04140100	油门摆杆组件	BOLT	1					
29	F4-04140200	浮子	FLOAT	1					
30	F4-04140301	放油螺塞	PLUG, DRAIN	1					
31	F4-04140302	放油螺塞垫片	GASKET	1					
32	F4-04140300	浮子本体组件	BODY, FLOAT CHAMBER	1					
33	GB/T818-M4X12	十字槽盘头螺钉M4X12	BOLT	2					
34	GB/T818-M4X8	十字槽盘头螺钉M4X8	BOLT	1					
35	GB/T94.1-3	弹性垫圈3	WASHER , SPRING	2					